FIBRE OPTICE

Capitolul 1

PROBLEMATICA ABORDATA

- Descrierea propagarii undelor luminoase folosind ecuatiile lui Maxwell
- Dispersia in fibra optica
- Limitarea vitezei de transmisie datorita dispersiei
- Pierderile in FO
- Efecte neliniare in fibra optica

Ghid cilindric dielectric si fibra optica

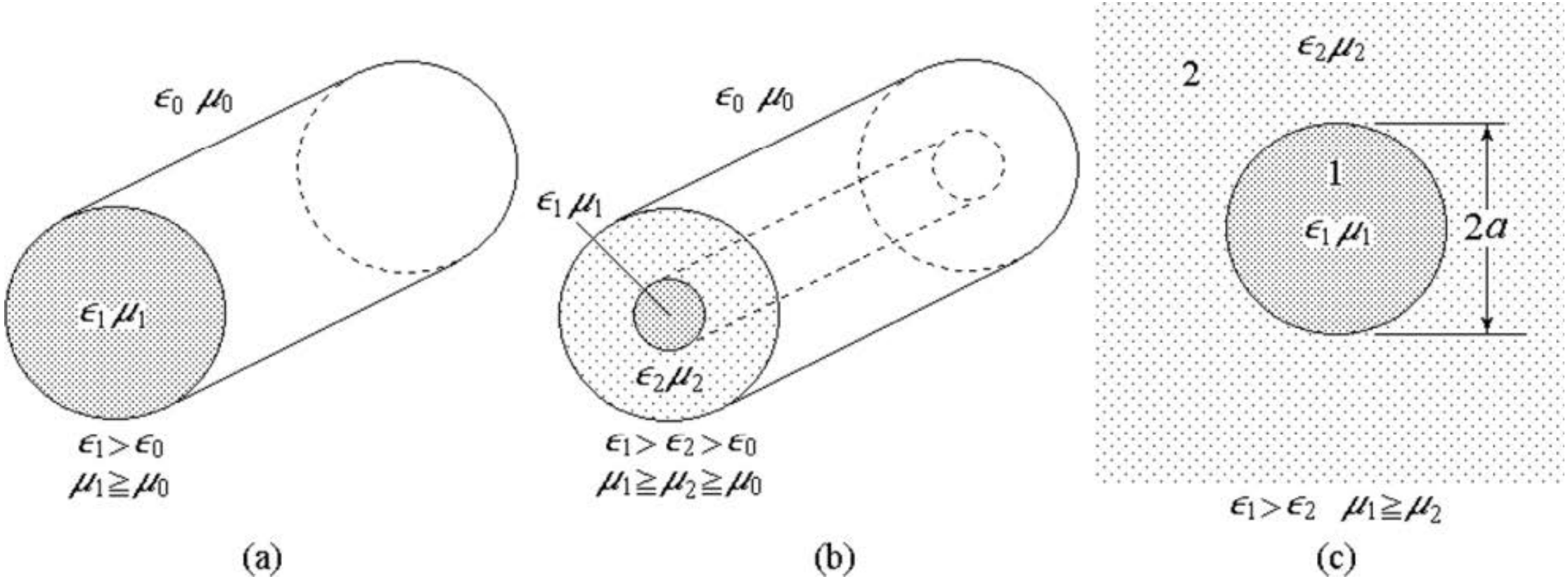

Vector de pozitie si functie vectoriala

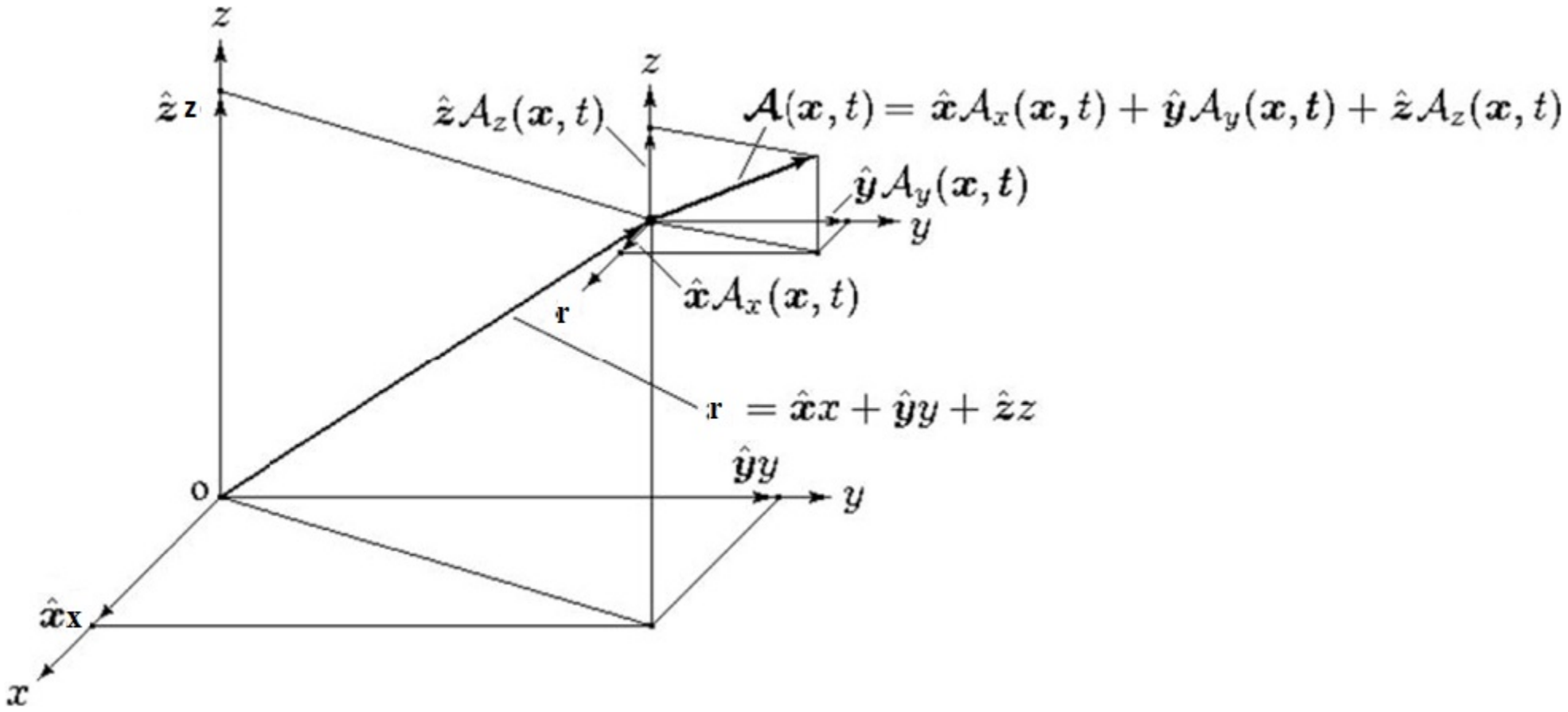

Ecuatiile lui Maxwell in vid

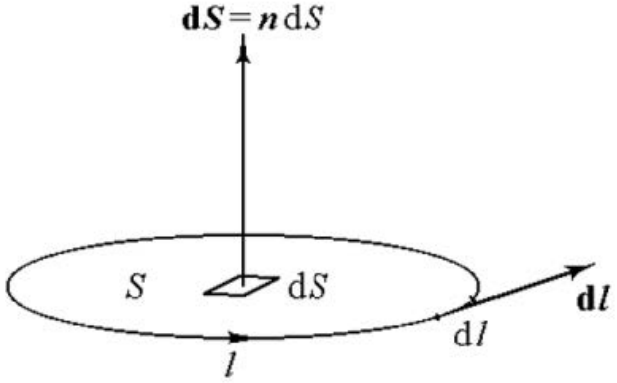

(a)

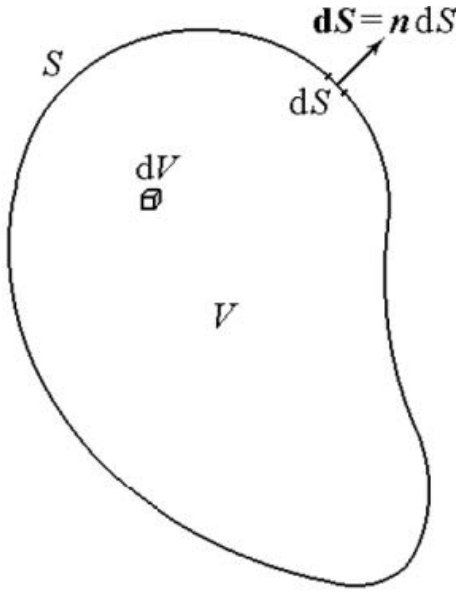

(b)

$$\begin{cases} \nabla \times \mathcal{E} = -\partial \mathcal{B} / \partial t \\ \nabla \times \left(\mathcal{B} / \mu_0 \right) = \partial \left(\varepsilon_0 \mathcal{E} \right) / \partial t + \mathcal{J} \\ \nabla \cdot \left(\varepsilon_0 \mathcal{E} \right) = \rho \\ \nabla \cdot \mathcal{B} = 0 \end{cases}$$

$$q(t) = \iiint_V \rho(\mathbf{r}, t)\, dV$$

$$I(t) = \iint_S \mathcal{J}(\mathbf{r}, t) \cdot d\mathbf{S}$$

$$\nabla \cdot \mathcal{J} = -\partial \rho / \partial t$$

$$I(t) = -dq(t)/dt$$

Ecuatiile lui Maxwell in material

$$\begin{cases} \nabla \times \mathcal{E} = -\partial \mathcal{B}/\partial t \\ \nabla \times \left(\mathcal{B}/\mu_0\right) = \partial\left(\varepsilon_0 \mathcal{E}\right)/\partial t + \mathcal{J}_f + \mathcal{J}_P + \mathcal{J}_M \\ \nabla \cdot \left(\varepsilon_0 \mathcal{E}\right) = \rho_f + \rho_P \\ \nabla \cdot \mathcal{B} = 0 \end{cases}$$

$$\begin{cases} \nabla \times \mathcal{E} = -\partial \mathcal{B}/\partial t \\ \nabla \times \left(\mathcal{B}/\mu_0\right) - \nabla \times \mathcal{M} = \partial\left(\varepsilon_0 \mathcal{E}\right)/\partial t + \mathcal{J}_f + \partial \mathcal{P}/\partial t \\ \nabla \cdot \left(\varepsilon_0 \mathcal{E}\right) + \nabla \cdot \mathcal{P} = \rho_f \\ \nabla \cdot \mathcal{B} = 0 \end{cases}$$

$$\begin{cases} \nabla \times \mathcal{E} = -\partial \mathcal{B}/\partial t \\ \nabla \times \mathcal{H} = \partial \mathcal{D}/\partial t + \mathcal{J}_f \\ \nabla \cdot \mathcal{D} = \rho_f \\ \nabla \cdot \mathcal{B} = 0 \end{cases}$$

$$\rho_P = -\nabla \cdot \mathcal{P}$$

$$\mathcal{J}_f = \sigma \mathcal{E}$$

$$\mathcal{J}_P = \partial \mathcal{P}/\partial t$$

$$\mathcal{J}_M = \nabla \times \mathcal{M}$$

$$\mathcal{B}/\mu_0 - \mathcal{M} = \mathcal{H}$$

$$\varepsilon_0 \mathcal{E} + \mathcal{P} = \mathcal{D}$$

Materiale simple = nedispersive, liniare, izotrope

$$\boxed{\begin{aligned}\mathcal{P} &= \varepsilon_0 \chi_e \mathcal{E} \\ \mathcal{M} &= \chi_m \mathcal{H}\end{aligned}}$$

$$\mathcal{D} = \varepsilon_0 \mathcal{E} + \varepsilon_0 \chi_e \mathcal{E} = \varepsilon_0 \left(1 + \chi_e\right) \mathcal{E} = \varepsilon_0 \varepsilon_r \mathcal{E} = \varepsilon \mathcal{E}$$

$$\mathcal{B} = \mu_0 \left(1 + \chi_m\right) \mathcal{H} = \mu_0 \mu_r \mathcal{H} = \mu \mathcal{H}$$

$$\boxed{\begin{cases} \nabla \times \mathcal{E} = -\mu\, \partial \mathcal{H} / \partial t \\ \nabla \times \mathcal{H} = \varepsilon\, \partial \mathcal{E} / \partial t + \sigma \mathcal{E} + \mathcal{J} \\ \nabla \cdot \mathcal{E} = \rho / \varepsilon \\ \nabla \cdot \mathcal{H} = 0 \end{cases}}$$

Ecuatiile lui Maxwell in domeniul frecventa-1

$$\mathcal{A}(\mathbf{r},t) = \mathbf{A}(\mathbf{r})\sin(\omega t+\phi) = \Im\left[\mathbf{A}(\mathbf{r})e^{j\phi}e^{j\omega t}\right] = \Im\left[\underline{\mathbf{A}}(\mathbf{r})e^{j\omega t}\right]$$

$$\mathcal{A}(\mathbf{r},t) = \hat{\mathbf{x}}\mathrm{A}_x(\mathbf{r},t) + \hat{\mathbf{y}}\mathrm{A}_y(\mathbf{r},t) + \hat{\mathbf{z}}\mathrm{A}_z(\mathbf{r},t) =$$

$$= \hat{\mathbf{x}}A_x(\mathbf{r})\sin(\omega t+\phi_x) + \hat{\mathbf{y}}A_y(\mathbf{r})\sin(\omega t+\phi_y) + \hat{\mathbf{z}}A_z(\mathbf{r})\sin(\omega t+\phi_z) =$$

$$= \Im\left[\hat{\mathbf{x}}A_x(\mathbf{r})e^{j\phi_x}e^{j\omega t} + \hat{\mathbf{y}}A_y(\mathbf{r})e^{j\phi_y}e^{j\omega t} + \hat{\mathbf{z}}A_z(\mathbf{r})e^{j\phi_z}e^{j\omega t}\right] =$$

$$= \Im\left\{\left[\hat{\mathbf{x}}\underline{A}_x(\mathbf{r}) + \hat{\mathbf{y}}\underline{A}_y(\mathbf{r}) + \hat{\mathbf{z}}\underline{A}_z(\mathbf{r})\right]e^{j\omega t}\right\}$$

$$\underline{\mathbf{A}}(\mathbf{r}) = \hat{\mathbf{x}}\underline{A}_x(\mathbf{r}) + \hat{\mathbf{y}}\underline{A}_y(\mathbf{r}) + \hat{\mathbf{z}}\underline{A}_z(\mathbf{r}) = \Re\left[\underline{\mathbf{A}}(\mathbf{r})\right] + j\Im\left[\underline{\mathbf{A}}(\mathbf{r})\right]$$

$$\mathcal{A}(\mathbf{r},t) = \Im\left[\underline{\mathbf{A}}(\mathbf{r})e^{j\omega t}\right] = \Re\left[\underline{\mathbf{A}}(\mathbf{r})\right]\sin\omega t + \Im\left[\underline{\mathbf{A}}(\mathbf{r})\right]\cos\omega t$$

Ecuatiile lui Maxwell in domeniul frecventa

$$\frac{\partial \mathrm{A}(\mathbf{r},t)}{\partial t} = \frac{\partial \Im\left[\underline{A}(\mathbf{r})e^{j\omega t}\right]}{\partial t} = \Im\left[\underline{A}(\mathbf{r})\, j\omega e^{j\omega t}\right]$$

$$\begin{cases} \nabla \times \mathbf{E} = -j\omega\mathbf{B} \\ \nabla \times \mathbf{H} = j\omega\mathbf{D} + \mathbf{J}_f \\ \nabla \cdot \mathbf{D} = \rho_f \\ \nabla \cdot \mathbf{B} = 0 \end{cases}$$

$$\mathbf{D} = \varepsilon\mathbf{E}$$

$$\mathbf{B} = \mu\mathbf{H}$$

$$\begin{cases} \nabla \times \mathbf{E} = -j\omega\mu\mathbf{H} \\ \nabla \times \mathbf{H} = j\omega\varepsilon\mathbf{E} + \sigma\mathbf{E} + \mathbf{J} \\ \nabla \cdot \mathbf{E} = \rho/\varepsilon \\ \nabla \cdot \mathbf{H} = 0 \end{cases}$$

$$\nabla \cdot \mathbf{J} = -j\omega\rho$$

Medii lipsite de surse

$$\rho = 0$$

$$\mathbf{J} = \mathbf{0}$$

$$\begin{cases} \nabla \times \mathbf{E} = -j\omega\mu\mathbf{H} \\ \nabla \times \mathbf{H} = j\omega\varepsilon\mathbf{E} + \sigma\mathbf{E} \\ \nabla \cdot \mathbf{E} = 0 \\ \nabla \cdot \mathbf{H} = 0 \end{cases} \qquad \sigma \ll \omega\varepsilon \qquad \begin{cases} \nabla \times \mathbf{E} = -j\omega\mu\mathbf{H} \\ \nabla \times \mathbf{H} = j\omega\varepsilon\mathbf{E} \\ \nabla \cdot \mathbf{E} = 0 \\ \nabla \cdot \mathbf{H} = 0 \end{cases}$$

Medii dispersive

$$\mathcal{D} = \varepsilon\mathcal{E} + \varepsilon_1\,\partial\mathcal{E}/\partial t + \varepsilon_2\,\partial^2\mathcal{E}/\partial t^2 + \varepsilon_3\,\partial^3\mathcal{E}/\partial t^3 + \cdots$$

$$\mathcal{B} = \mu\mathcal{H} + \mu_1\,\partial\mathcal{H}/\partial t + \mu_2\,\partial^2\mathcal{H}/\partial t^2 + \mu_3\,\partial^3\mathcal{H}/\partial t^3 + \cdots$$

$$\mathbf{D} = \varepsilon\mathbf{E} + j\omega\varepsilon_1\mathbf{E} - \omega^2\varepsilon_2\mathbf{E} - j\omega^3\varepsilon_3\mathbf{E} + \cdots$$

$$\mathbf{B} = \mu\mathbf{H} + j\omega\mu_1\mathbf{H} - \omega^2\mu_2\mathbf{H} - j\omega^3\mu_3\mathbf{H} + \cdots$$

$$\mathbf{D} = \left(\varepsilon - \omega^2\varepsilon_2 + \cdots\right)\mathbf{E} - j\left(-\omega\varepsilon_1 + \omega^3\varepsilon_3 - \cdots\right)\mathbf{E} = \left[\varepsilon'(\omega) - j\varepsilon''(\omega)\right]\mathbf{E} = \underline{\varepsilon}(\omega)\mathbf{E}$$

$$\mathbf{B} = \left(\mu - \omega^2\mu_2 + \cdots\right)\mathbf{H} - j\left(-\omega\mu_1 + \omega^3\mu_3 - \cdots\right)\mathbf{H} = \left[\mu'(\omega) - j\mu''(\omega)\right]H = \underline{\mu}(\omega)\mathbf{H}$$

$$\underline{\varepsilon} = |\underline{\varepsilon}|e^{-j\delta} = |\underline{\varepsilon}|\cos\delta - j|\underline{\varepsilon}|\sin\delta$$

$$\underline{\mu} = |\underline{\mu}|e^{-j\theta} = |\underline{\mu}|\cos\theta - j|\underline{\mu}|\sin\theta$$

$$\tan\delta = \varepsilon''/\varepsilon'$$

$$\tan\theta = \mu''/\mu'$$

Medii dispersive (2)

$$\begin{cases} \nabla \times \mathbf{E} = -j\omega\underline{\mu}(\omega)\mathbf{H} = -j\omega\mu'\mathbf{H} - \omega\mu''\mathbf{H} \\ \nabla \times \mathbf{H} = j\omega\underline{\varepsilon}(\omega)\mathbf{E} + \sigma\mathbf{E} + \mathbf{J} = j\omega\varepsilon'\mathbf{E} + \omega\varepsilon''\mathbf{E} + \sigma\mathbf{E} + \mathbf{J} \\ \nabla \cdot \underline{\varepsilon}(\omega)\mathbf{E} = \nabla \cdot (\varepsilon' - j\varepsilon'')\mathbf{E} = \rho \\ \nabla \cdot \underline{\mu}(\omega)\mathbf{H} = \nabla \cdot (\mu' - j\mu'')\mathbf{H} = 0 \end{cases}$$

Curenti si sarcini magnetice

$$\begin{cases} \nabla \times \mathcal{E} = -\partial \mathcal{B} / \partial t - \mathcal{J}_m \\ \nabla \times \left(\mathcal{B} / \mu_0 \right) = \partial \left(\varepsilon_0 \mathcal{E} \right) / \partial t + \mathcal{J} \\ \nabla \cdot \left(\varepsilon_0 \mathcal{E} \right) = \rho \\ \nabla \cdot \mathcal{B} = \rho_m \end{cases}$$

Conditii pe frontiera

$$\begin{cases} \mathbf{n}\times\left(\mathbf{E}_2-\mathbf{E}_1\right)=-\mathbf{J}_{mS} \\ \mathbf{n}\times\left(\mathbf{H}_2-\mathbf{H}_1\right)=\mathbf{J}_S \\ \mathbf{n}\cdot\left(\mathbf{D}_2-\mathbf{D}_1\right)=\rho_S \\ \mathbf{n}\cdot\left(\mathbf{B}_2-\mathbf{B}_1\right)=\rho_{ms} \end{cases}$$

$$\mathbf{n}\cdot\left(\mathbf{J}_2-\mathbf{J}_1\right)=-j\omega\rho_S$$

$$\mathbf{n}\cdot\left(\mathcal{J}_2-\mathcal{J}_1\right)=-\partial\rho_S/\partial t$$

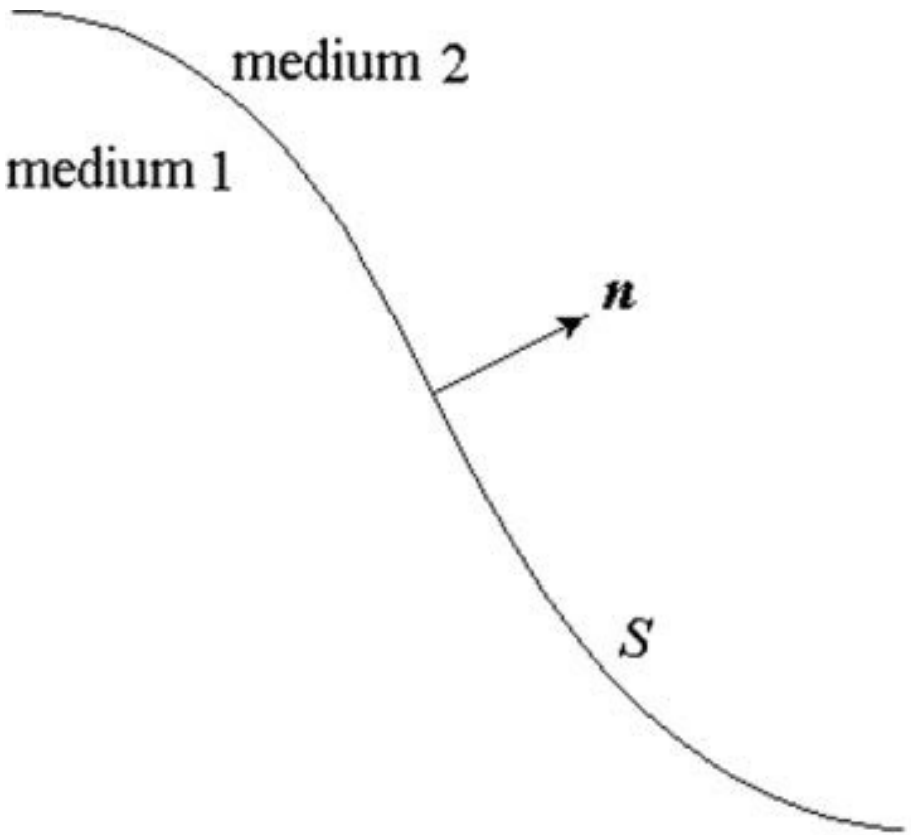

(a)

Perete electric

$$\mathbf{n}\cdot\mathbf{D}=\rho_S$$
$$\mathbf{n}\times\mathbf{H}=\mathbf{J}_S$$
$$\mathbf{n}\times\mathbf{E}=0$$
$$\mathbf{n}\cdot\mathbf{B}=0$$

$$\Leftrightarrow\begin{cases}\mathbf{E}_t\big|_S=0\\ \mathbf{H}_t\big|_S\neq 0\end{cases}$$

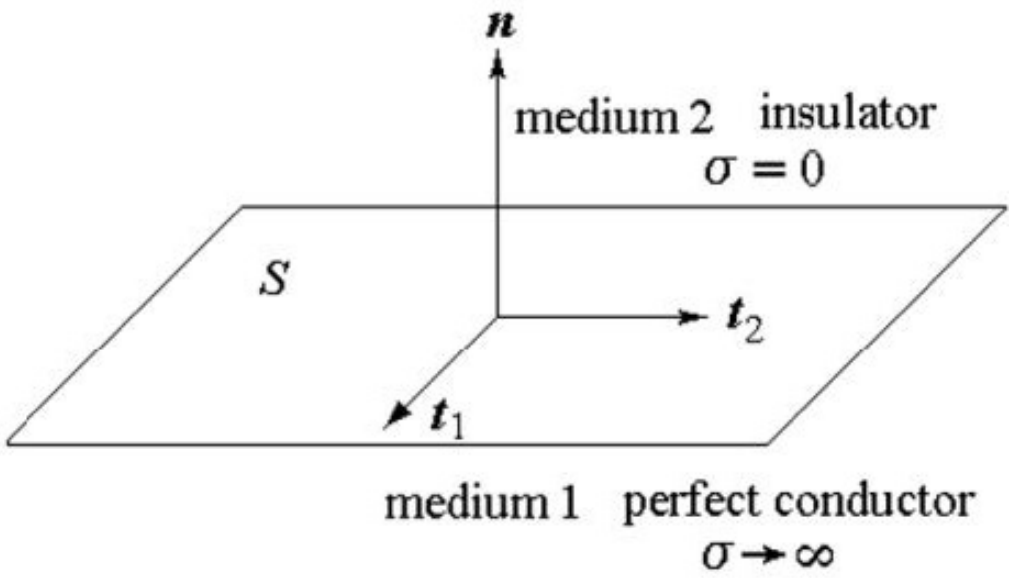

(b)

$$\begin{cases}\mathbf{E}_1=\mathbf{H}_1=\mathbf{D}_1=\mathbf{B}_1=0\\ \mathbf{E}_1=\mathbf{E},\quad \mathbf{H}_2=\mathbf{H},\quad \mathbf{D}_2=\mathbf{D},\quad \mathbf{B}_2=\mathbf{B}\end{cases}$$

Perete magnetic

$$\mathbf{n}\cdot\mathbf{D}=0$$
$$\mathbf{n}\times\mathbf{H}=0$$
$$\mathbf{n}\times\mathbf{E}=-\mathbf{J}_{ms}$$
$$\mathbf{n}\cdot\mathbf{B}=\rho_{ms}$$

$$\Leftrightarrow\begin{cases}\mathbf{E}_t\big|_S\neq 0\\ \mathbf{H}_t\big|_S=0\end{cases}$$

Suprafata impedanta/admitanta

$$Z_S = \frac{E_t}{H_t} \qquad Y_S = \frac{1}{Z_S} = \frac{H_t}{E_t}$$

Ecuatia undelor in domeniul timp
- medii simple-

Ecuatii de unda neomogene

$$\nabla^2 \mathcal{E} - \mu\sigma \frac{\partial \mathcal{E}}{\partial t} - \mu\varepsilon \frac{\partial^2 \mathcal{E}}{\partial t^2} = \frac{1}{\varepsilon} \nabla \rho + \mu \frac{\partial \mathcal{J}}{\partial t} \quad (1)$$

$$\nabla^2 \mathcal{H} - \mu\sigma \frac{\partial \mathcal{H}}{\partial t} - \mu\varepsilon \frac{\partial^2 \mathcal{H}}{\partial t^2} = -\nabla \times \mathcal{J} \quad (2)$$

Medii fara excitatii, conductivitate mica, frecventa mare:

$$\rho = 0, \mathcal{J} = 0, \sigma \approx 0$$

$$\nabla^2 \mathcal{E} - \mu\varepsilon \frac{\partial^2 \mathcal{E}}{\partial t^2} = 0 \quad (3)$$

$$\nabla^2 \mathcal{H} - \mu\varepsilon \frac{\partial^2 \mathcal{H}}{\partial t^2} = 0 \quad (4)$$

Ecuatii de unda omogene

Medii fara excitatii, conductivitate mare, frecventa mica:

$$\rho = 0, \quad \mathcal{J} = 0, \quad \partial^2 / \partial t^2 = 0$$

$$\nabla^2 \mathcal{E} - \mu\sigma \frac{\partial \mathcal{E}}{\partial t} = 0 \quad (5)$$

$$\nabla^2 \mathcal{H} - \mu\sigma \frac{\partial \mathcal{H}}{\partial t} = 0 \quad (6)$$

Ecuatii de difuzie omogene

Ecuatia undelor in domeniul frecventa
- medii simple-

$$\nabla^2\mathbf{E} - j\omega\mu\sigma\mathbf{E} + \omega^2\mu\varepsilon\mathbf{E} = \frac{1}{\varepsilon}\nabla\rho + j\omega\mu\mathbf{J} \quad (1)$$

$$\nabla^2\mathbf{H} - j\omega\mu\sigma\mathbf{H} + \omega^2\mu\varepsilon\mathbf{H} = -\nabla\times\mathbf{J} \quad (2)$$

$$k^2 = \omega^2\varepsilon\mu - j\omega\mu\sigma$$

Ecuatii de unda
Complexe, neomogene

$$\nabla^2\mathbf{E} + k^2\mathbf{E} = \frac{1}{\varepsilon}\nabla\rho + j\omega\mu\mathbf{J} \quad (3)$$

$$\nabla^2\mathbf{H} + k^2\mathbf{H} = -\nabla\times\mathbf{J} \quad (4)$$

$$\rho = 0, \mathbf{J} = \mathbf{0}$$

Ecuatii
Helmholtz

$$\nabla^2\mathbf{E} + k^2\mathbf{E} = 0 \quad (5)$$

$$\nabla^2\mathbf{H} + k^2\mathbf{H} = 0 \quad (6)$$

Rezolvarea ecuatiei Helmholtz

- Probleme mixte
- Probleme de valori initiale
- Probleme de valori pe feontiera

$$\nabla^2 \mathbf{E} + k^2 \mathbf{E} = 0 \quad (5)$$

$$\nabla^2 \mathbf{H} + k^2 \mathbf{H} = 0 \quad (6)$$

Teoreme de unicitate

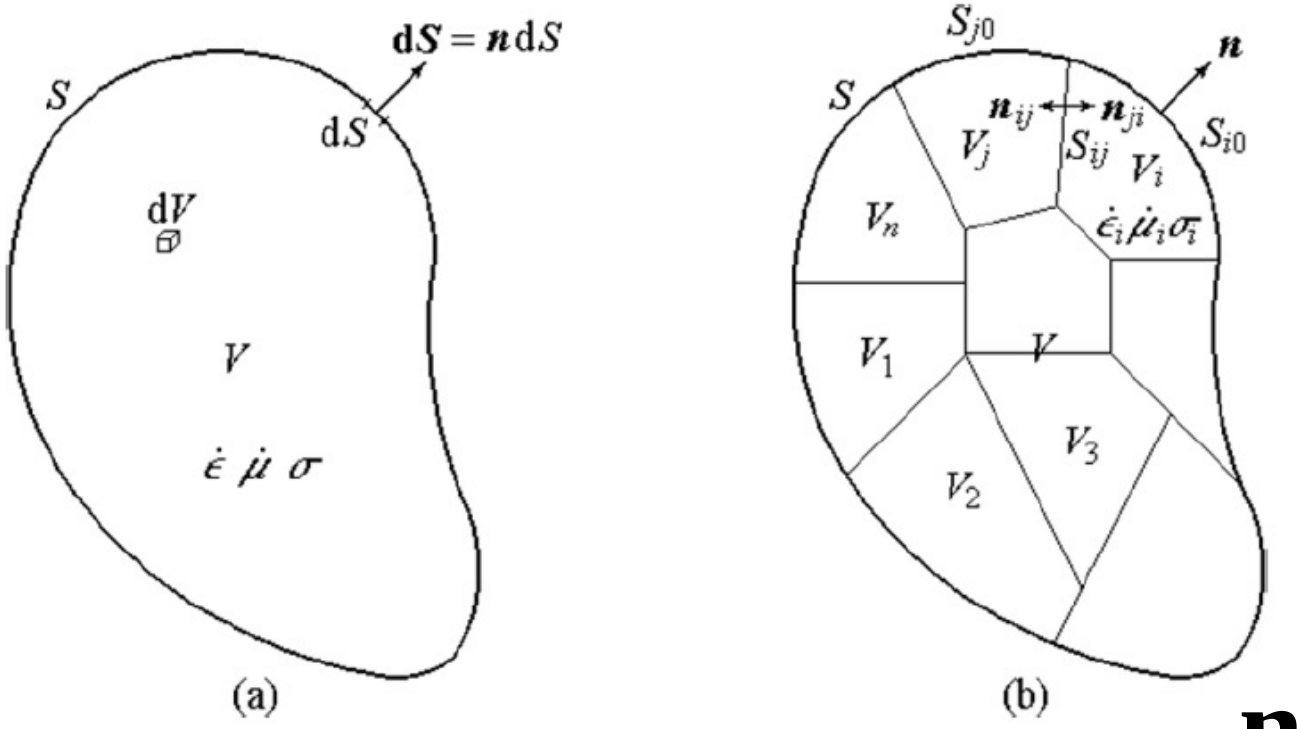

$$\mathbf{n}\times\mathbf{E}\big|_{S}$$

$$\mathbf{n}\times\mathbf{H}\big|_{S}$$

$$\mathbf{n}\times\mathbf{E}_i\big|_{S_{ij}} = \mathbf{n}\times\mathbf{E}_j\big|_{S_{ij}}$$

$$\mathbf{n}\times\mathbf{H}_i\big|_{S_{ij}} = \mathbf{n}\times\mathbf{H}_j\big|_{S_{ij}}$$

Sistemul de coordinate curbilinii

$$f\left(x,y,z\right)=u \quad (1)$$

$$\begin{cases} f_1\left(x,y,z\right)=u_1 \\ f_2\left(x,y,z\right)=u_2 \\ f_3\left(x,y,z\right)=u_3 \end{cases} \quad (2)$$

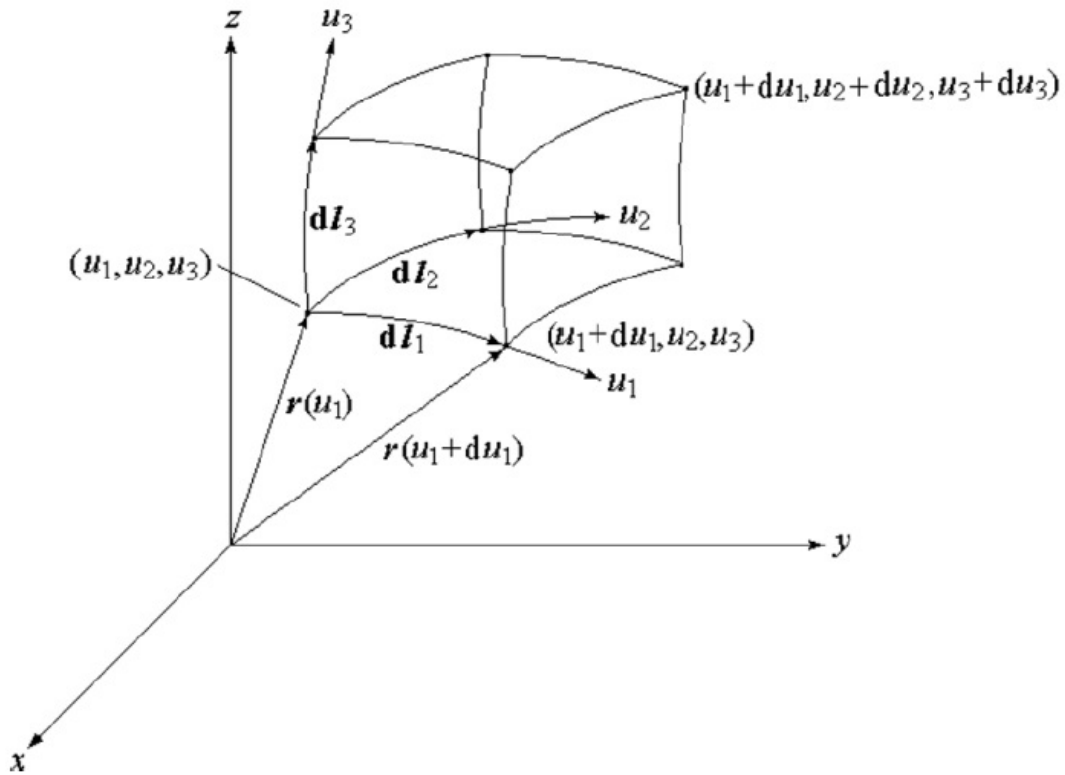

$$\begin{cases} d\mathbf{l}_i=\mathbf{r}\left(u_i+du_i\right)-r\left(u_i\right)=\dfrac{\partial\mathbf{r}}{\partial u_i}du_i \\ dl_i=\left|d\mathbf{l}_i\right|=\left|\dfrac{\partial\mathbf{r}}{\partial u_i}\right|du_i \end{cases} \quad (3)$$

Sistemul de coordinate curbilinii - 2

$$\begin{cases} \dfrac{\partial \mathbf{r}}{\partial u_i} = \displaystyle\sum_{j=1}^{3} \dfrac{\partial x_j}{\partial u_i} \hat{\mathbf{x}}_j \\ \left| \dfrac{\partial \mathbf{r}}{\partial u_i} \right| = \sqrt{\displaystyle\sum_{j=1}^{3} \left(\dfrac{\partial x_j}{\partial u_i} \right)^2} \overset{n}{=} h_i \end{cases} \qquad (4)$$

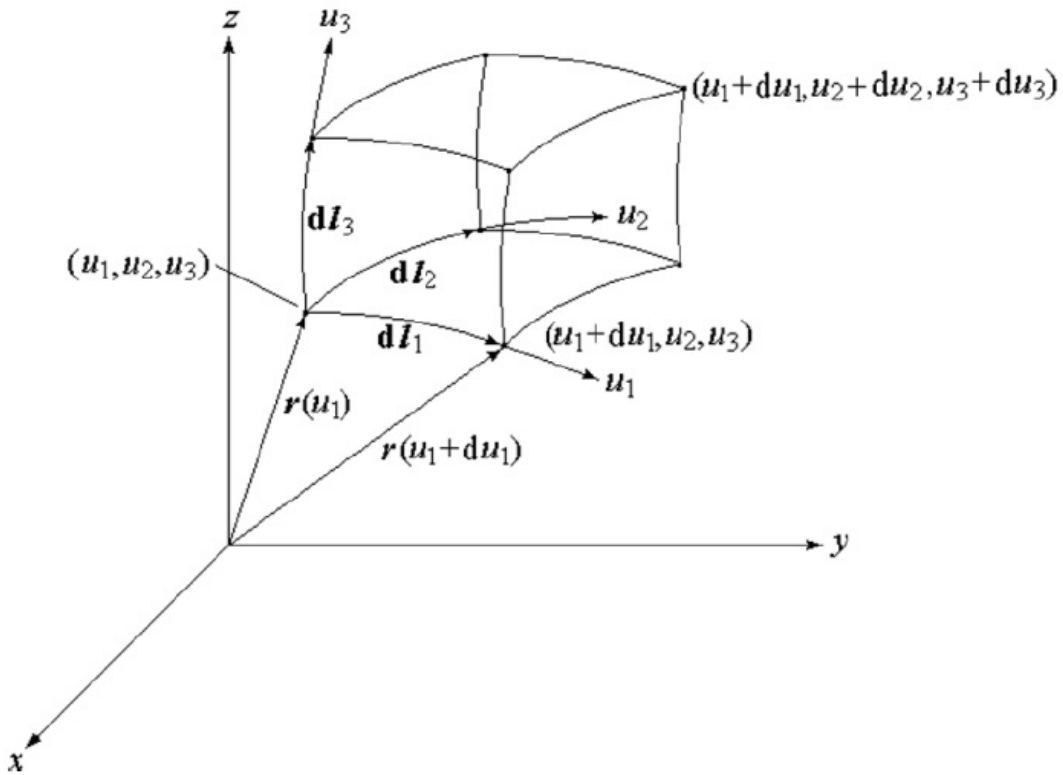

Sistemul de coordinate curbilinii - 3

$$\begin{cases} d\mathbf{l}_i = \hat{\mathbf{u}}_i h_i du_i \\ dl_i = h_i du_i \\ \hat{\mathbf{u}}_i = \dfrac{d\mathbf{l}_i}{dl_i} = \dfrac{1}{h_i}\dfrac{\partial \mathbf{r}}{\partial u_i} \end{cases} \qquad (5)$$

$$\begin{cases} \hat{\mathbf{u}}_i \cdot \hat{\mathbf{u}}_j = 0 \\ \dfrac{\partial \mathbf{r}}{\partial u_i} \cdot \dfrac{\partial \mathbf{r}}{\partial u_j} = 0 \end{cases} \qquad (6)$$

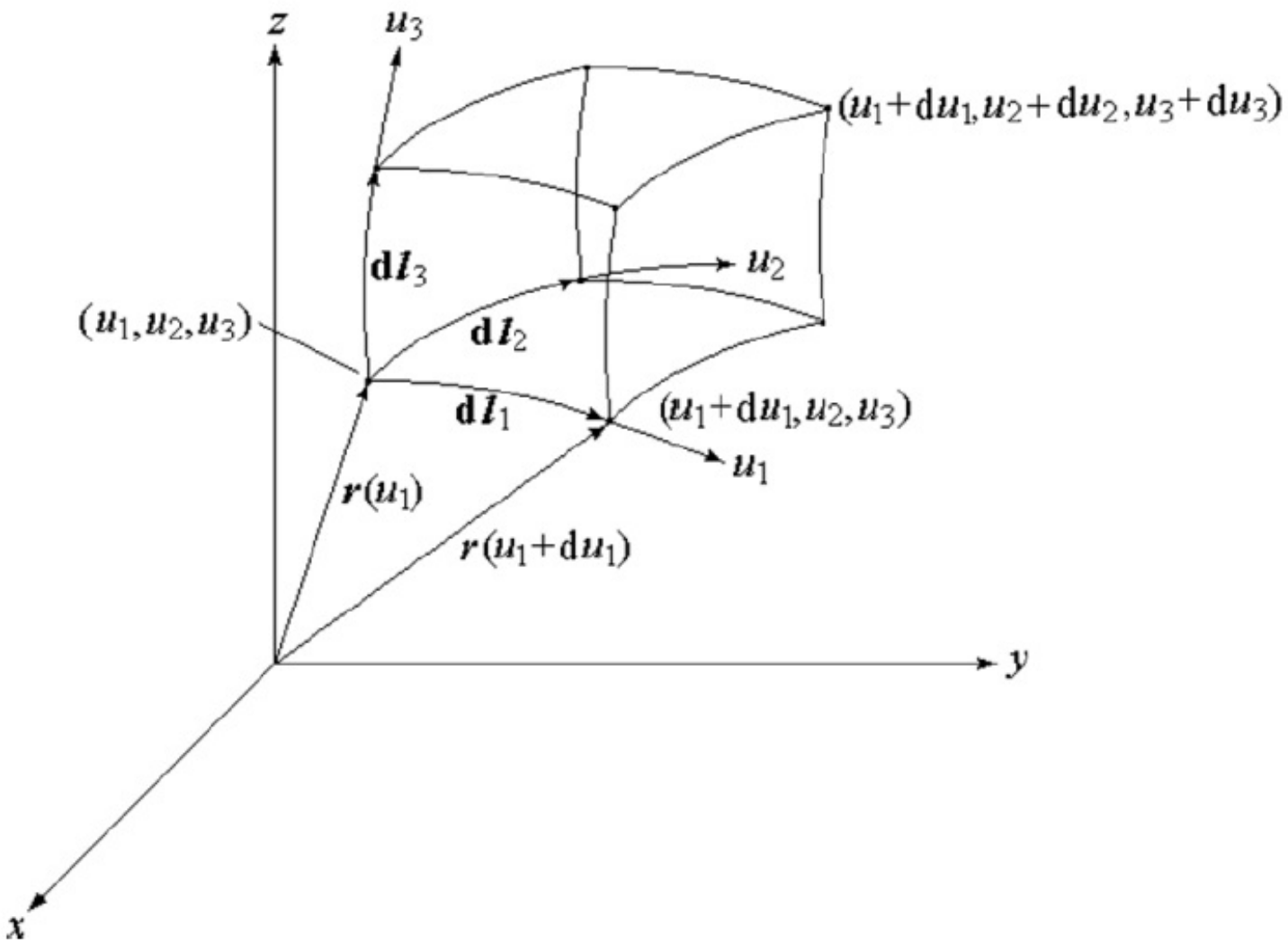

Sistemul de coordinate curbilinii - 4

$$\begin{cases} d\mathbf{S}_i = d\mathbf{l}_j \times d\mathbf{l}_k = \mathbf{u}_i h_j h_k du_j du_k \\ dS_i = h_j h_k du_j du_k \\ \hat{\mathbf{u}}_i = \hat{\mathbf{u}}_j \times \hat{\mathbf{u}}_k \end{cases} \qquad (7)$$

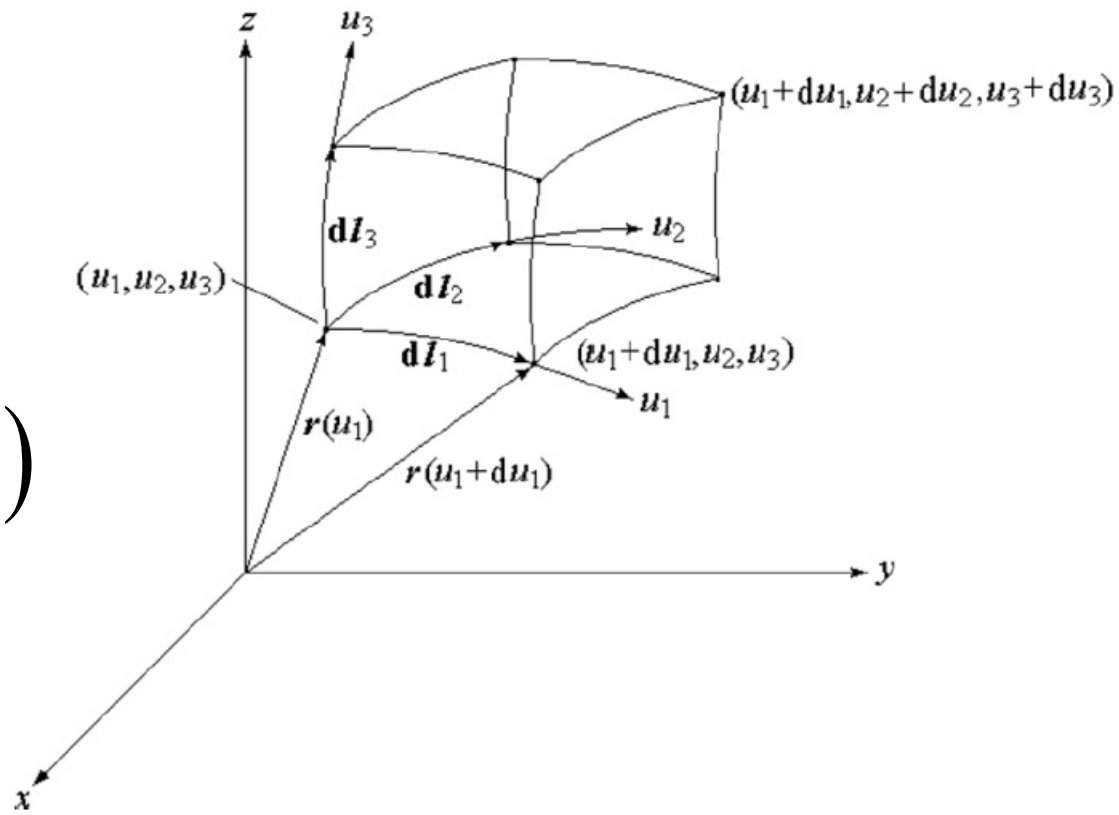

$$\begin{cases} dV = d\mathbf{l}_i \bullet d\mathbf{l}_j \times d\mathbf{l}_k = h_i h_j h_k du_i du_j du_k = \\ = h_1 h_2 h_3 du_1 du_2 du_3 = \sqrt{g}\, du_1 du_2 du_3 \end{cases} \qquad (8)$$

Sistemul de coordinate curbilinii - 5

$$
\begin{cases}
\nabla \varphi = \sum_{i=1}^{3} \hat{\mathbf{u}}_i \frac{1}{h_i} \frac{\partial \varphi}{\partial u_i} \\
\nabla \cdot \mathbf{A} = \frac{1}{h_1 h_2 h_3} \sum_{i=1}^{3} \frac{\partial}{\partial u_i} \left(h_j h_k A_i \right) \\
\nabla \times \mathbf{A} = \sum_{i=1}^{3} \hat{\mathbf{u}}_i \frac{1}{h_j h_k} \left[\frac{\partial}{\partial u_j} \left(h_k A_k \right) - \frac{\partial}{\partial u_k} \left(h_j A_j \right) \right] \\
\nabla^2 \varphi = \frac{1}{h_1 h_2 h_3} \sum \frac{\partial}{\partial u_i} \left(\frac{h_j h_k}{h_i} \frac{\partial \varphi}{\partial u_i} \right)
\end{cases}
\qquad (9)
$$

Rezolvarea ecuatiei vectoriale Helmholtz in coordinate curbilinii ortogonale

$$\nabla^2 \mathbf{E} + k^2 \mathbf{E} = 0 \quad (1)$$

$$\nabla^2 \mathbf{H} + k^2 \mathbf{H} = 0 \quad (2)$$

$$k^2 = \omega^2 \varepsilon \mu - j\omega\mu\sigma \quad (3)$$

$$k^2 = \omega^2 \varepsilon \mu - j\omega\mu\sigma \xrightarrow{\sigma \approx 0} \omega^2 \varepsilon \mu \quad (4)$$

Metoda potentialelor Borgnis

$$\nabla \times \mathbf{E} = -j\omega\mu\mathbf{H} \quad (1)$$

$$\nabla \times \mathbf{H} = j\omega\varepsilon\mathbf{E} \quad (2)$$

$$\mathbf{E} = \hat{\mathbf{u}}_1 E_1 + \hat{\mathbf{u}}_2 E_2 + \hat{\mathbf{u}}_3 E_3 \quad (3)$$

$$\mathbf{H} = \hat{\mathbf{u}}_1 H_1 + \hat{\mathbf{u}}_2 H_2 + \hat{\mathbf{u}}_3 H_3 \quad (4)$$

$$\begin{cases} \dfrac{\partial}{\partial u_2}(h_3 E_3) - \dfrac{\partial}{\partial u_3}(h_2 E_2) = -j\omega\mu h_2 h_3 H_1 \ (5) \\ \dfrac{\partial}{\partial u_3}(h_1 E_1) - \dfrac{\partial}{\partial u_1}(h_3 E_3) = -j\omega\mu h_3 h_1 H_2 \ (6) \\ \dfrac{\partial}{\partial u_1}(h_2 E_2) - \dfrac{\partial}{\partial u_2}(h_1 E_1) = -j\omega\mu h_1 h_2 H_3 \ (7) \end{cases}$$

$$\begin{cases} \dfrac{\partial}{\partial u_2}(h_3 H_3) - \dfrac{\partial}{\partial u_3}(h_2 H_2) = j\omega\varepsilon h_2 h_3 E_1 \ (8) \\ \dfrac{\partial}{\partial u_3}(h_1 H_1) - \dfrac{\partial}{\partial u_1}(h_3 H_3) = j\omega\varepsilon h_3 h_1 E_2 \ (9) \\ \dfrac{\partial}{\partial u_1}(h_2 H_2) - \dfrac{\partial}{\partial u_2}(h_1 H_1) = j\omega\varepsilon h_1 h_2 E_3 \ (10) \end{cases}$$

Metoda potentialelor Borgnis
Teorema 1

$$h_3 = 1, \frac{\partial}{\partial u_3}\left(\frac{h_1}{h_2}\right) = 0 \quad (1)$$

$$\begin{cases} E_1 = \dfrac{1}{h_1}\dfrac{\partial^2 U}{\partial u_3 \partial u_1} - j\omega\mu \dfrac{1}{h_2}\dfrac{\partial V}{\partial u_2} \quad (2) \\ E_2 = \dfrac{1}{h_2}\dfrac{\partial^2 U}{\partial u_2 \partial u_3} + j\omega\mu \dfrac{1}{h_1}\dfrac{\partial V}{\partial u_1} \quad (3) \\ E_3 = \dfrac{\partial^2 U}{\partial u_3^2} + k^2 U \quad (4) \end{cases}$$

$$\begin{cases} H_1 = \dfrac{1}{h_1}\dfrac{\partial^2 V}{\partial u_3 \partial u_1} + j\omega\varepsilon \dfrac{1}{h_2}\dfrac{\partial U}{\partial u_2} \quad (5) \\ H_2 = \dfrac{1}{h_2}\dfrac{\partial^2 V}{\partial u_2 \partial u_3} - j\omega\varepsilon \dfrac{1}{h_1}\dfrac{\partial U}{\partial u_1} \quad (6) \\ H_3 = \dfrac{\partial^2 V}{\partial u_3^2} + k^2 V \quad (7) \end{cases}$$

Metoda potentialelor Borgnis
Teorema 1 – cont.

$$\nabla_T^2 U + \frac{\partial^2 U}{\partial u_3^2} + k^2 U = 0 \quad (8)$$

$$\nabla_T^2 V + \frac{\partial^2 V}{\partial u_3^2} + k^2 V = 0 \quad (9)$$

$$\nabla_T^2 = \frac{1}{h_1 h_2}\left[\frac{\partial}{\partial u_1}\left(\frac{h_2}{h_1}\frac{\partial}{\partial u_1}\right) + \frac{\partial}{\partial u_2}\left(\frac{h_1}{h_2}\frac{\partial}{\partial u_2}\right)\right] \quad (10)$$

Metoda potentialelor Borgnis
Teorema 2

$$\frac{\partial}{\partial u_3}\left(h_1 h_2\right) = 0 \quad (11)$$

$$\begin{cases} \nabla^2 U + k^2 U = 0 & (12) \\ \nabla^2 V + k^2 V = 0 & (13) \end{cases}$$

$$(1) + (11) \quad \rightarrow \quad h_3 = 1\,,\ \frac{\partial h_1}{\partial u_3} = 0\,,\ \frac{\partial h_2}{\partial u_3} = 0 \quad (14)$$

Sistemul arbitrar de coordinate cilindrice

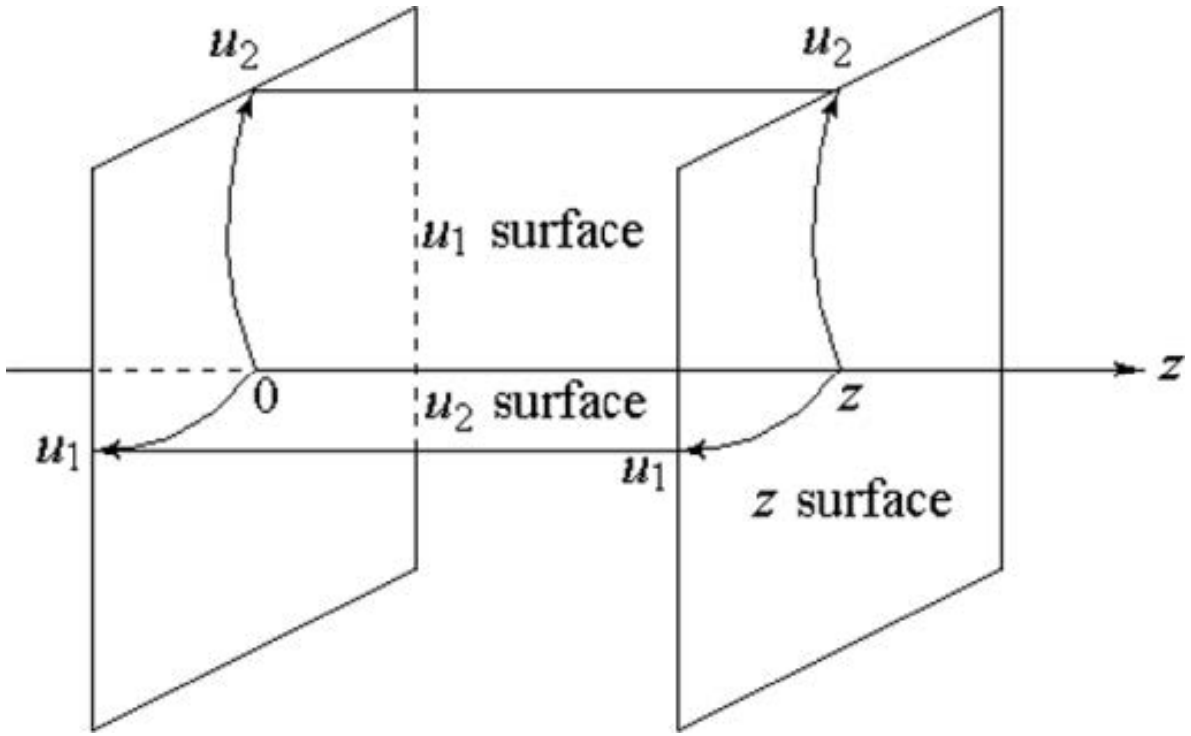

$$\nabla^2 = \nabla_T^2 + \frac{\partial^2}{\partial u_3^2} = \nabla_T^2 + \frac{\partial^2}{\partial z^2} \quad (1)$$

$$e^{j(\omega t \pm \beta z)} \quad si \quad \frac{\partial^2}{\partial z^2} = -\beta^2 \quad (2)$$

$$\begin{cases} E_z = \left(k^2 - \beta^2\right)U = T^2 U & (3) \\ H_z = \left(k^2 - \beta^2\right)V = T^2 V & (4) \end{cases}$$

$$\begin{cases} E_1 = -\dfrac{j\beta}{h_1}\dfrac{\partial U}{\partial u_1} - \dfrac{j\omega\mu}{h_2}\dfrac{\partial V}{\partial u_2} & (5) \\ E_2 = -\dfrac{j\beta}{h_2}\dfrac{\partial U}{\partial u_2} + \dfrac{j\omega\mu}{h_1}\dfrac{\partial V}{\partial u_1} & (6) \\ H_1 = -\dfrac{j\beta}{h_2}\dfrac{\partial V}{\partial u_2} + \dfrac{j\omega\varepsilon}{h_1}\dfrac{\partial U}{\partial u_1} & (7) \\ H_2 = -\dfrac{j\beta}{h_2}\dfrac{\partial V}{\partial u_2} - \dfrac{j\omega\varepsilon}{h_1}\dfrac{\partial U}{\partial u_1} & (8) \end{cases}$$

Sistemul arbitrar de coordinate cilindrice

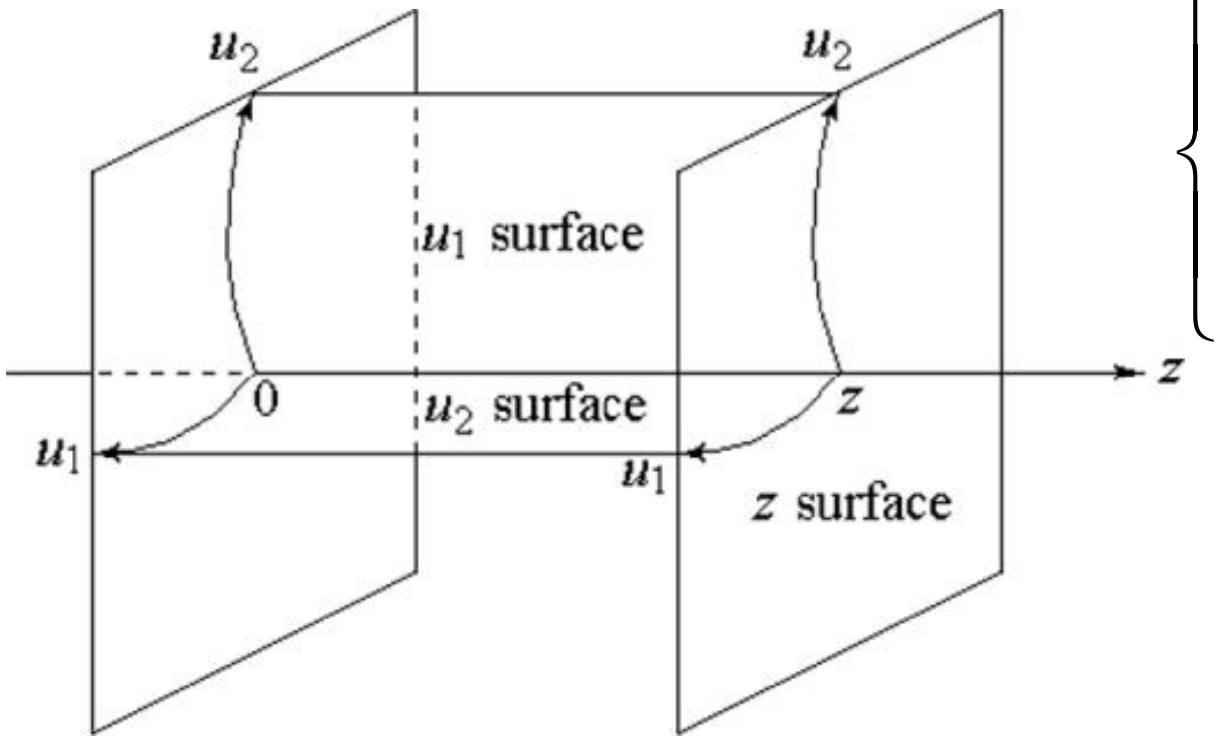

$$\nabla^2 = \nabla_T^2 + \frac{\partial^2}{\partial u_3^2} = \nabla_T^2 + \frac{\partial^2}{\partial z^2} \quad (1)$$

$$\nabla_T^2 U + \frac{\partial^2 U}{\partial z^2} + k^2 U = 0 \quad (2)$$

$$\begin{cases} U(u_1, u_2, z) = U_T(u_1, u_2) Z(z) & (3) \\ \dfrac{\nabla_T^2 U_T}{U_T} + \dfrac{d^2 Z / dz^2}{Z} = -k^2 & (4) \end{cases}$$

$$\begin{cases} \dfrac{d^2 Z / dz^2}{Z} = -\beta^2 \,,\ \dfrac{\nabla_T^2 U_T}{U_T} = -T^2 \\ \beta^2 + T^2 = k^2 \,,\ \beta = \sqrt{k^2 - T^2} \end{cases} \quad (5)$$

Sistemul arbitrar de coordinate cilindrice - 2

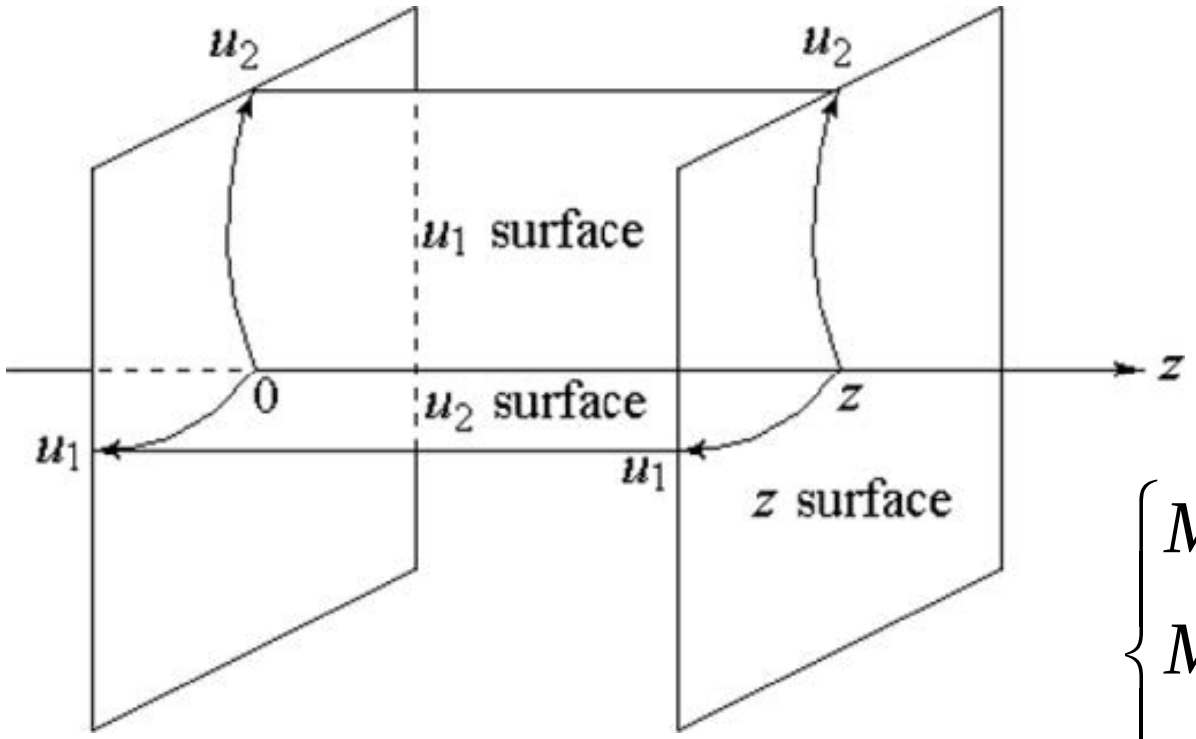

$$Z(z) = Z_1 e^{-j\beta z} + Z_2 e^{j\beta z} \quad (8)$$

$$\begin{cases} Modul\ TEM : T^2 = 0 & (9) \\ Moduri\ de\ unda\ rapide : T^2 > 0 & (10) \\ Moduri\ de\ unda\ lente : T^2 < 0 & (11) \end{cases}$$

$$\frac{d^2 Z}{dz^2} + \beta^2 Z = 0 \quad (6)$$

$$\nabla_T^2 U_T + T^2 U_T = 0 \quad (7)$$

Sistemul arbitrar de coordinate cilindrice - 3

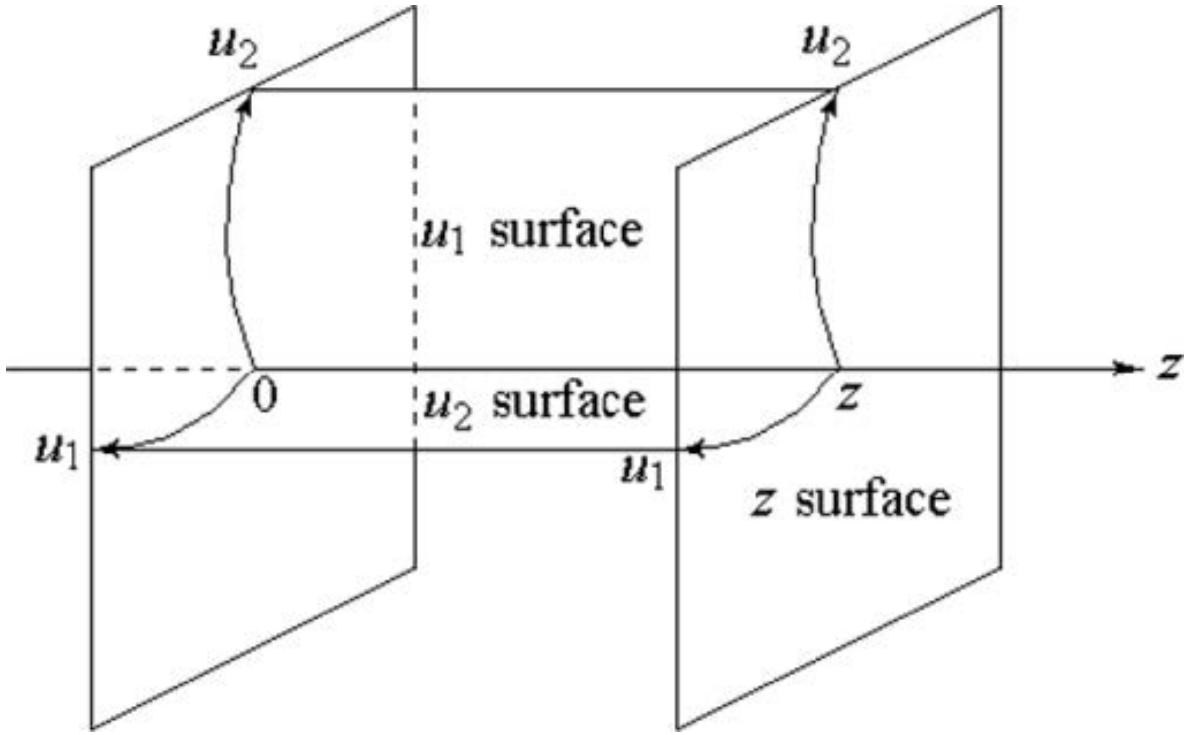

$$\begin{cases} E_z = \left(k^2 - \beta^2\right)U = T^2 U & (12) \\ H_z = \left(k^2 - \beta^2\right)V = T^2 V & (13) \end{cases}$$

$$\begin{cases} E_1 = -\dfrac{j\beta}{h_1}\dfrac{\partial U}{\partial u_1} - \dfrac{j\omega\mu}{h_2}\dfrac{\partial V}{\partial u_2} & (14) \\ E_2 = -\dfrac{j\beta}{h_2}\dfrac{\partial U}{\partial u_2} + \dfrac{j\omega\mu}{h_1}\dfrac{\partial V}{\partial u_1} & (15) \\ H_1 = -\dfrac{j\beta}{h_2}\dfrac{\partial V}{\partial u_2} + \dfrac{j\omega\varepsilon}{h_1}\dfrac{\partial U}{\partial u_1} & (16) \\ H_2 = -\dfrac{j\beta}{h_2}\dfrac{\partial V}{\partial u_2} - \dfrac{j\omega\varepsilon}{h_1}\dfrac{\partial U}{\partial u_1} & (17) \end{cases}$$

Sistemul de coordonate cilindrice circulare

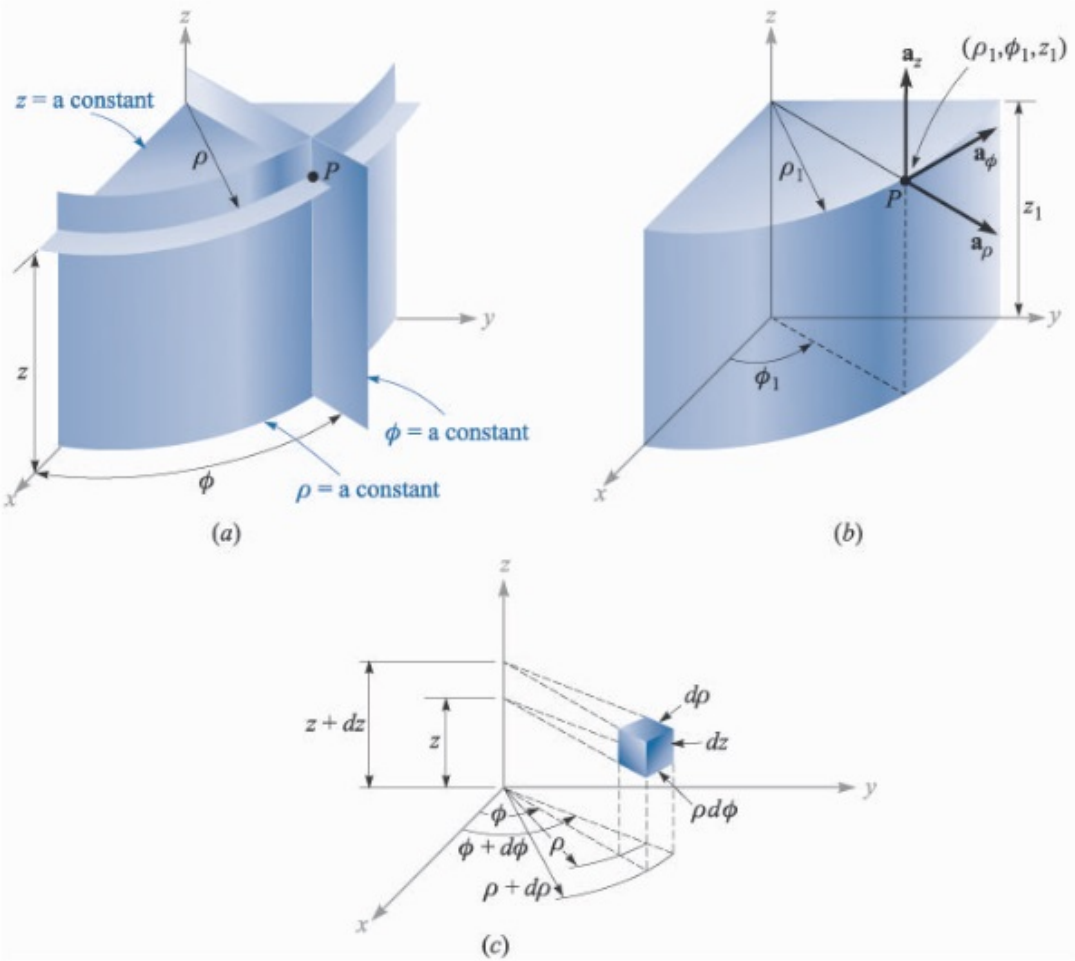

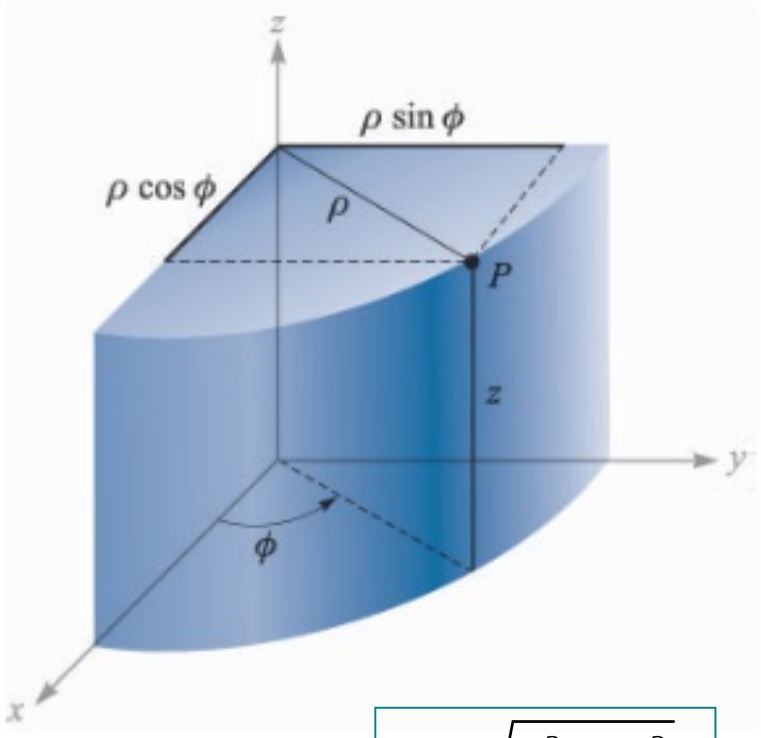

$$x = \rho \cos\phi$$
$$y = \rho \sin\phi$$
$$z = z$$

$$\rho = \sqrt{x^2 + y^2}$$
$$\phi = Arctg\left(\frac{y}{x}\right)$$
$$z = z$$

Rezolvarea ecuatiei Helmholtz in coordonate cilindrice circulare

$$u_1 = \rho, u_2 = \phi, u_3 = z \Rightarrow h_1 = h_3 = 1, h_2 = \rho \quad (1)$$

$$\boxed{\frac{1}{\rho}\frac{\partial}{\partial\rho}\left(\rho\frac{\partial U_T}{\partial\rho}\right) + \frac{1}{\rho^2}\frac{\partial^2 U_T}{\partial\phi^2} + T^2 U_T = 0 \quad (2)}$$

$$U_T(\rho,\phi) = R(\rho)\Phi(\phi) \quad (3)$$

$$\frac{\rho\, d\left(\rho\, dR/d\rho\right)/d\rho}{R} + \frac{d^2\Phi/d\phi^2}{\Phi} = -T^2\rho^2 \quad (4)$$

$$\boxed{\frac{d^2\Phi}{d\phi^2} = -\nu^2\Phi \quad (5)}$$

$$\boxed{\rho\frac{d}{d\rho}\left(\rho\frac{dR}{d\rho}\right) + \left(T^2\rho^2 - \nu^2\right)R = 0 \quad (6)}$$

Rezolvarea ecuatiei Helmholtz in coordonate cilindrice circulare - 2

$$\boxed{\frac{d^2\Phi}{d\phi^2} = -\nu^2\Phi \quad (5)}$$

$$\Phi(\phi) = c_\nu e^{j\nu\phi} + d_\nu e^{-j\nu\phi} = C_\nu \cos(\nu\phi) + D_\nu \sin(\nu\phi) \quad (7)$$

Rezolvarea ecuatiei Helmholtz in coordonate cilindrice circulare - 3

$$\boxed{\rho \frac{d}{d\rho}\left(\rho \frac{dR}{d\rho}\right) + \left(T^2\rho^2 - \nu^2\right)R = 0 \quad (6)}$$

$$x = T\rho$$

$$x\frac{d}{dx}\left[x\frac{dR(x)}{dx}\right] + \left(x^2 - \nu^2\right)R(x) = 0 \quad (8)$$

Solutii ale ecuatiei Bessel - ν(niu) fractionar

$$x\frac{d}{dx}\left[x\frac{dR(x)}{dx}\right]+\left(x^2-\nu^2\right)R(x)=0$$

Functii Bessel

$$\begin{cases} J_\nu(x)=\sum_{m=0}^{\infty}\frac{(-1)^m}{m!\Gamma(\nu+m+1)}\left(\frac{x}{2}\right)^{\nu+2m} \\ J_{-\nu}(x)=\sum_{m=0}^{\infty}\frac{(-1)^m}{m!\Gamma(-\nu+m+1)}\left(\frac{x}{2}\right)^{-\nu+2m} \end{cases} \quad (1)$$

Functii Noimann

$$N_\nu(x)=\frac{J_\nu(x)\cos(\nu\pi)-J_{-\nu}(x)}{\sin(\nu\pi)} \quad (2)$$

$$R(\rho)=a_\nu J_\nu(T\rho)+b_\nu J_{-\nu}(T\rho) \quad (3)$$

SAU

$$R(\rho)=A_\nu J_\nu(T\rho)+B_\nu N_\nu(T\rho) \quad (4)$$

Solutii ale ecuatiei de tip Bessel - ν(niu) intreg

$$x\frac{d}{dx}\left[x\frac{dR(x)}{dx}\right]+\left(x^2-n^2\right)R(x)=0$$

$$\Gamma(n+m+1)=(n+m)! \quad si \quad J_{-n}(x)=(-1)^n J_n(x) \quad (5)$$

$$J_n(x)=\sum_{m=0}^{\infty}\frac{(-1)^m}{m!\Gamma(n+m)}\left(\frac{x}{2}\right)^{n+2m} \quad (6)$$

$$N_n(x)=\lim_{\nu\to n}N_\nu(x)=\lim_{\nu\to n}\frac{J_\nu(x)\cos(\nu\pi)-J_{-\nu}(x)}{\sin(\nu\pi)}=\frac{1}{\pi}\left[\frac{\partial}{\partial\nu}J_\nu(x)-(-1)^n\frac{\partial}{\partial\nu}J_{-\nu}(x)\right]_{\nu=n} \quad (7)$$

$$\boxed{R(\rho)=A_nJ_n(T\rho)+B_nN_n(T\rho) \quad (8)}$$

Solutii complexe ale ecuatiei de tip Bessel

$$x\frac{d}{dx}\left[x\frac{dR(x)}{dx}\right]+\left(x^2-\nu^2\right)R(x)=0$$

Functii Hankel de tip 1 si 2

$$\begin{cases} H_\nu^{(1)}(x)=J_\nu(x)+jN_\nu(x) \\ H_\nu^{(2)}(x)=J_\nu(x)-jN_\nu(x) \end{cases} \quad (9)$$

$$\boxed{R(\rho)=A_\nu H_\nu^{(1)}(T\rho)+B_\nu H_\nu^{(2)}(T\rho) \quad (10)}$$

Solutii pentru R si $T^2>0$

$$\boxed{\rho\frac{d}{d\rho}\left(\rho\frac{dR}{d\rho}\right)+\left(T^2\rho^2-\nu^2\right)R=0}$$

$$R(\rho)=a_\nu J_\nu(T\rho)+b_\nu J_{-\nu}(T\rho)$$

sau

$$R(\rho)=A_\nu J_\nu(T\rho)+B_\nu N_\nu(T\rho)$$

sau

$$R(\rho)=A_n J_n(T\rho)+B_n N_n(T\rho)$$

sau

$$R(\rho)=A_\nu H_\nu^{(1)}(T\rho)+B_\nu H_\nu^{(2)}(T\rho)$$

Solutii pentru R si $T^2<0$

$$\boxed{T = j\tau}$$

$$\boxed{\rho \frac{d}{d\rho}\left(\rho \frac{dR}{d\rho}\right) - \left(\tau^2\rho^2 + \nu^2\right)R = 0 \quad (11)}$$

$$\boxed{x \frac{d}{dx}\left[x \frac{dR(x)}{dx}\right] - \left(x^2 + \nu^2\right)R(x) = 0 \quad (12)}$$

Functii Bessel modificate de tipul 1 si 2

$$\begin{cases} I_\nu(x) = j^{-\nu} J_\nu(x) \\ K_\nu(x) = j^{-\nu+1}\dfrac{\pi}{2} H_\nu^{(1)}(jx) = j^{-\nu+1}\dfrac{\pi}{2}\left[J_\nu(jx) + jN_\nu(jx)\right] \end{cases} \quad (13)$$

$$\boxed{R(\rho) = A_\nu I_\nu(\tau\rho) + B_\nu K_\nu(\tau\rho) \quad (14)}$$

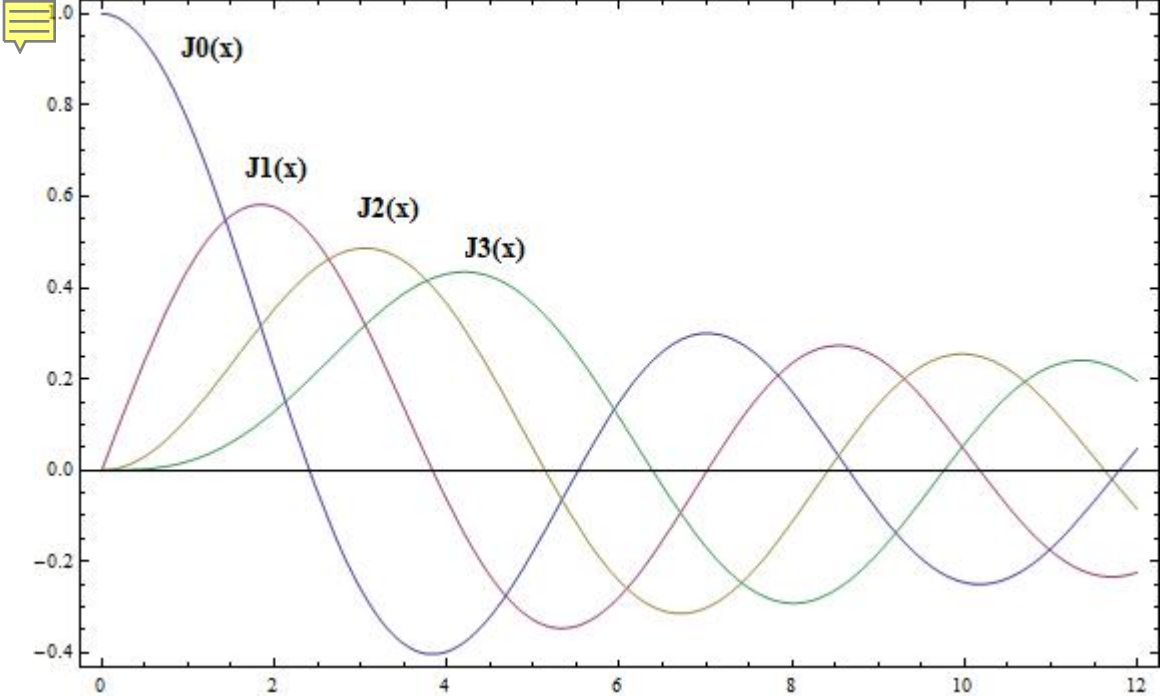

a)

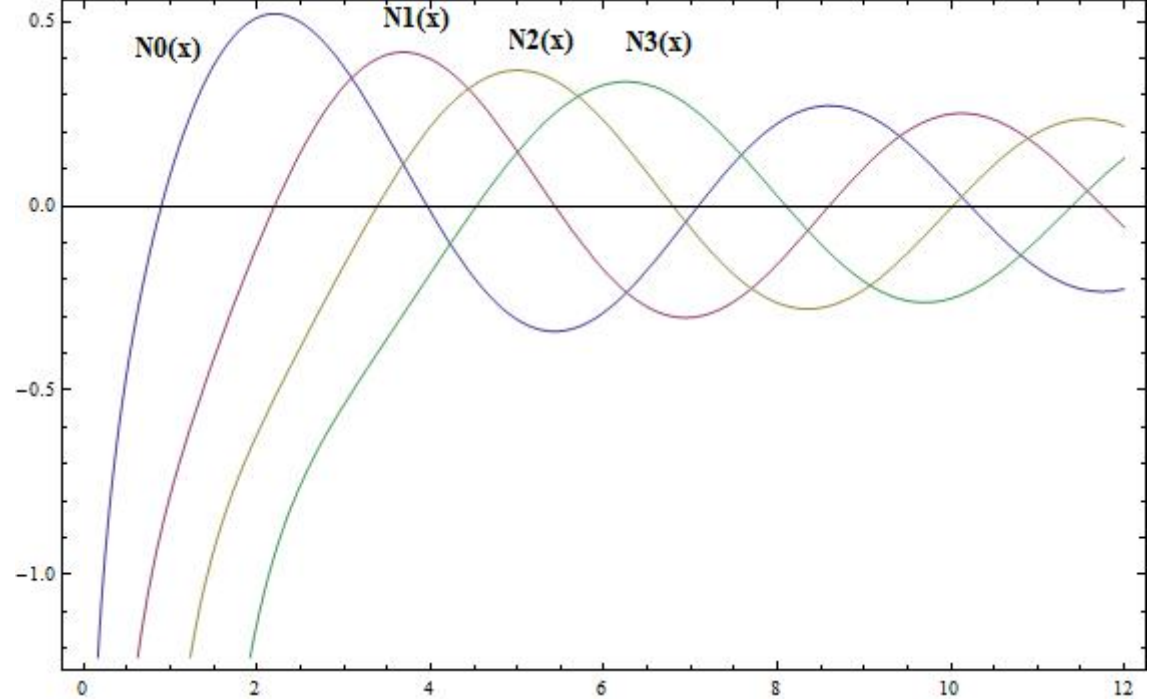

b)

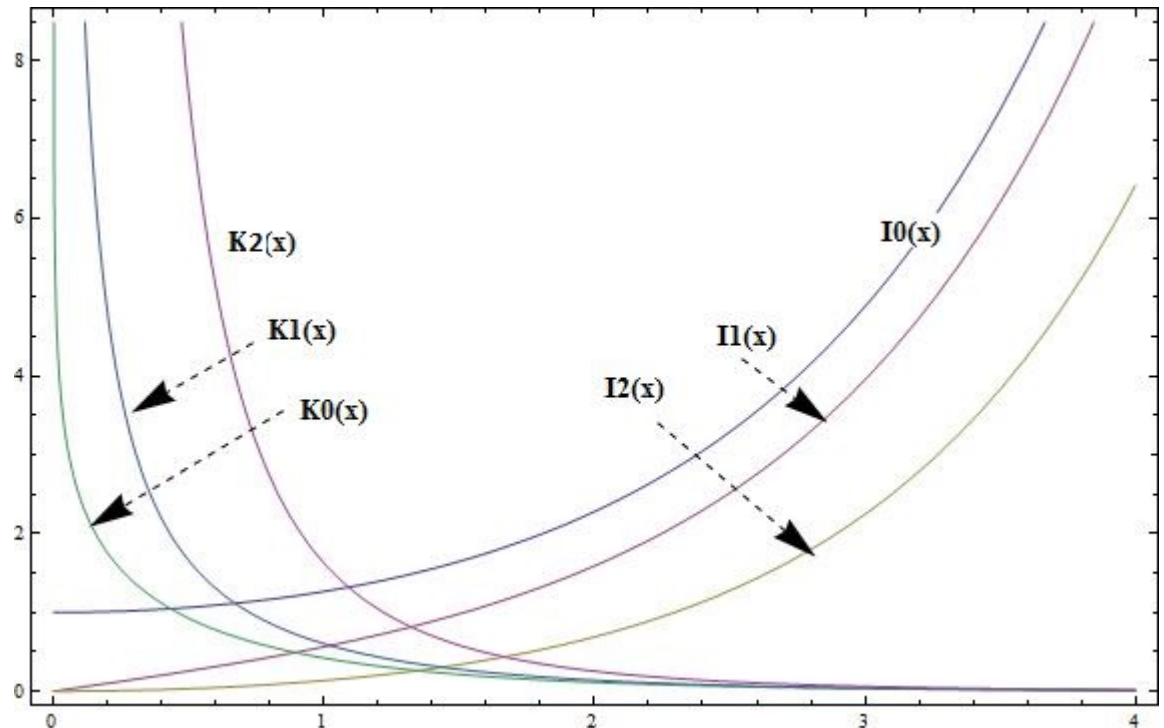

c)

Concluzii -1

$$\boxed{U,V(\rho,\phi,z)=R(\rho)\Phi(\phi)Z(z)}$$

$$Z(z)=Fe^{j\beta z}+Ge^{-j\beta z}=f\sin\beta z+g\cos\beta z=\sin(\beta z+\psi_z)\quad(1)$$

$$Z(z)=Fe^{K_z z}+Ge^{-K_z z}=f\sinh K_z z+g\cosh K_z z\quad(2)$$

$$\Phi(\phi)=C_\nu\cos\nu\phi+D_\nu\sin\nu\phi=c_\nu e^{j\nu\phi}+d_\nu e^{-j\nu\phi}\quad(3)$$

$$R(\rho)=\textit{combinatie liniara de doua functii Bessel}\quad(4)$$

Concluzii -2

$$u_1 = \rho, u_2 = \phi, u_3 = z$$

$$h_1 = h_3 = 1, h_2 = \rho$$

$$\begin{cases} E_\rho = \dfrac{\partial^2 U}{\partial\rho\partial z} - j\omega\mu\dfrac{1}{\rho}\dfrac{\partial V}{\partial\phi} & (5) \\ E_\phi = \dfrac{1}{\rho}\dfrac{\partial^2 U}{\partial\phi\partial z} + j\omega\mu\dfrac{\partial V}{\partial\rho} & (6) \\ E_z = \dfrac{\partial^2 U}{\partial z^2} + k^2 U = \left(k^2 - \beta^2\right)U = T^2 U = -\tau^2 U & (7) \end{cases}$$

$$\begin{cases} H_\rho = \dfrac{\partial^2 V}{\partial\rho\partial z} + j\omega\varepsilon\dfrac{1}{\rho}\dfrac{\partial U}{\partial\phi} & (8) \\ H_\phi = \dfrac{1}{\rho}\dfrac{\partial^2 V}{\partial\phi\partial z} - j\omega\varepsilon\dfrac{\partial U}{\partial\rho} & (9) \\ H_z = \dfrac{\partial^2 V}{\partial z^2} + k^2 V = \left(k^2 - \beta^2\right)V = T^2 V = -\tau^2 V & (10) \end{cases}$$

Concluzii -3

$$u_1 = \rho, u_2 = \phi, u_3 = z$$

$$h_1 = h_3 = 1, h_2 = \rho$$

$$\begin{cases} E_\rho = -j\beta \dfrac{\partial U}{\partial \rho} - j\omega\mu \dfrac{1}{\rho}\dfrac{\partial V}{\partial \phi} & (11) \\ E_\phi = -\dfrac{j\beta}{\rho}\dfrac{\partial U}{\partial \phi} + j\omega\mu \dfrac{\partial V}{\partial \rho} & (12) \\ E_z = \left(k^2 - \beta^2\right)U = T^2 U = -\tau^2 U & (13) \end{cases}$$

$$\begin{cases} H_\rho = -j\beta \dfrac{\partial V}{\partial \rho} + j\omega\varepsilon \dfrac{1}{\rho}\dfrac{\partial U}{\partial \phi} & (14) \\ H_\phi = -\dfrac{j\beta}{\rho}\dfrac{\partial V}{\partial \phi} - j\omega\varepsilon \dfrac{\partial U}{\partial \rho} & (15) \\ H_z = \left(k^2 - \beta^2\right)V = T^2 V = -\tau^2 V & (16) \end{cases}$$

Fibra optica

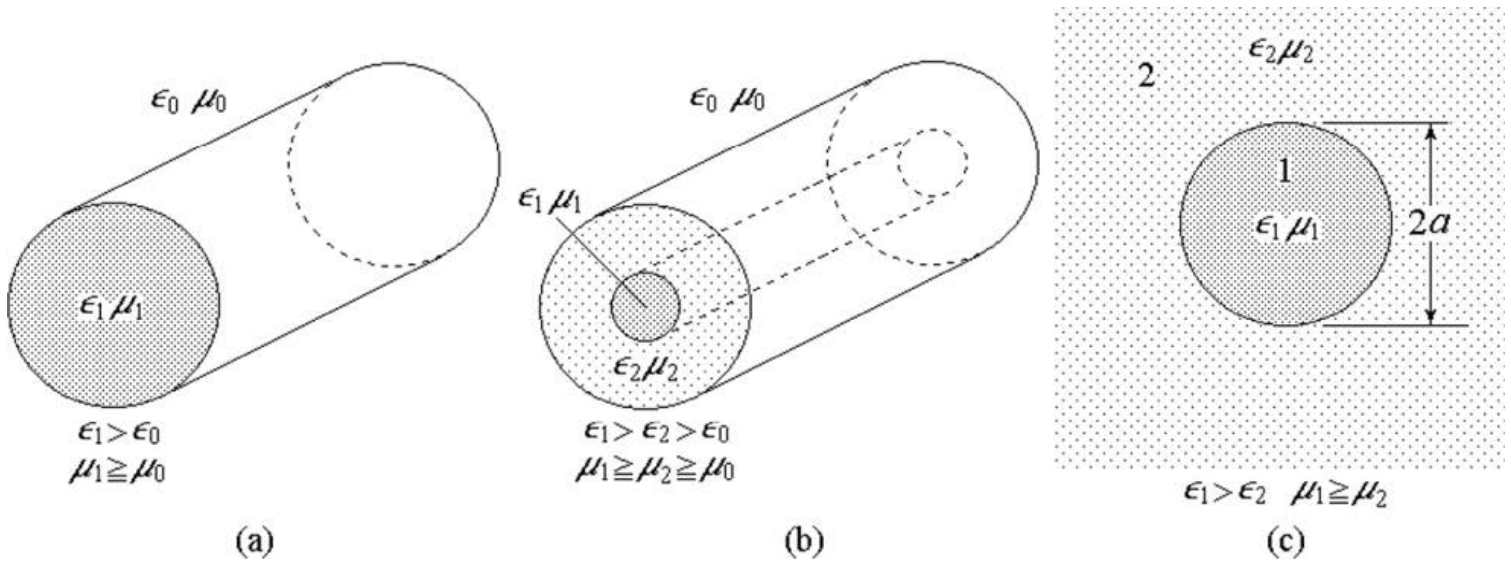

$$U(\rho,\phi,z) = R(\rho)\Phi(\phi)Z(z)$$

$$\boxed{R(\rho) = \begin{cases} AJ_n(T\rho) + A'N_n(T\rho),\ \rho \le a & (1) \\ CK_n(\tau\rho) + C'I_n(\tau\rho),\ \rho > a & (2) \end{cases}}$$

Ghid dielectric cilindric model pentru fibra optica

$$\begin{cases} U_1 = AJ_n(T\rho)e^{jn\phi}e^{-j\beta z} & (1) \\ V_1 = BJ_n(T\rho)e^{jn\phi}e^{-j\beta z} & (2) \end{cases}$$

Miez - 1

$$\begin{cases} E_{\rho 1} = \left[-j\beta TAJ_n'(T\rho) + \dfrac{\omega\mu_1 n}{\rho}BJ_n(T\rho)\right]e^{jn\phi}e^{-j\beta z} & (3) \\ E_{\phi 1} = \left[j\omega\mu_1 TBJ_n'(T\rho) + \dfrac{\beta n}{\rho}AJ_n(T\rho)\right]e^{jn\phi}e^{-j\beta z} & (4) \\ E_{z1} = T^2U_1 = AT^2J_n(T\rho)e^{jn\phi}e^{-j\beta z} & (5) \\ H_{\rho 1} = \left[-j\beta TBJ_n'(T\rho) - \dfrac{\omega\varepsilon_1 n}{\rho}AJ_n(T\rho)\right]e^{jn\phi}e^{-j\beta z} & (6) \\ H_{\phi 1} = \left[-j\omega\varepsilon_1 TAJ_n'(T\rho) + \dfrac{\beta n}{\rho}BJ_n(T\rho)\right]e^{jn\phi}e^{-j\beta z} & (7) \\ H_{z1} = T^2V_1 = BT^2J_n(T\rho)e^{jn\phi}e^{-j\beta z} & (8) \end{cases}$$

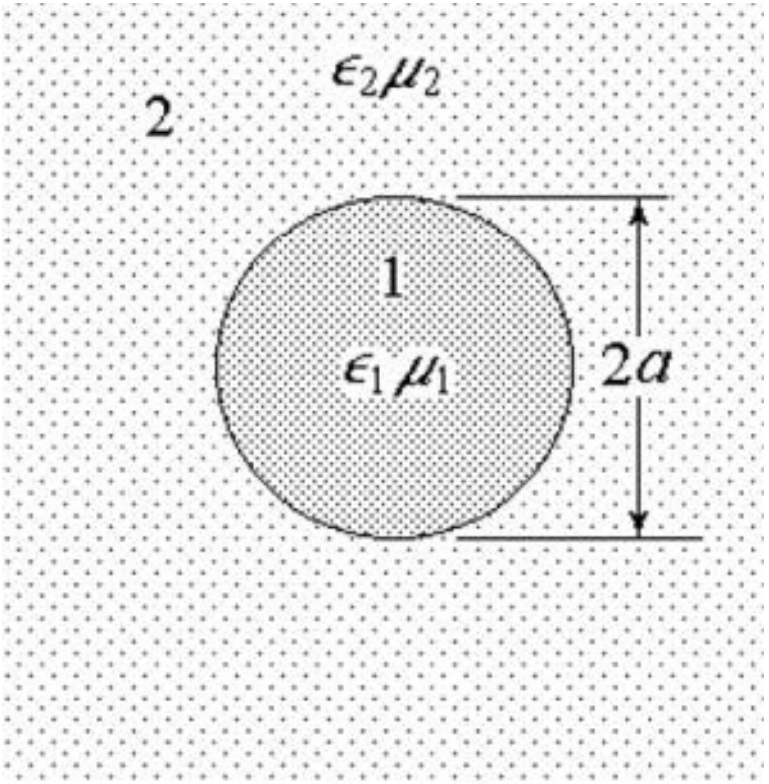

$\epsilon_1 > \epsilon_2 \quad \mu_1 \geqq \mu_2$

Ghid dielectric cilindric model pentru fibra optica - 2

$$\begin{cases} U_2 = CK_n(\tau\rho)e^{jn\phi}e^{-j\beta z} & (1) \\ V_2 = DK_n(\tau\rho)e^{jn\phi}e^{-j\beta z} & (2) \end{cases}$$

Teaca- 2

$$\begin{cases} E_{\rho 2} = \left[-j\beta\tau CK_n'(\tau\rho) + \dfrac{\omega\mu_2 n}{\rho}DK_n(\tau\rho)\right]e^{jn\phi}e^{-j\beta z} & (3) \\ E_{\phi 2} = \left[j\omega\mu_2\tau DK_n'(\tau\rho) + \dfrac{\beta n}{\rho}CK_n(\tau\rho)\right]e^{jn\phi}e^{-j\beta z} & (4) \\ E_{z2} = T^2U_2 = -\tau^2 CK_n(\tau\rho)e^{jn\phi}e^{-j\beta z} & (5) \\ H_{\rho 2} = \left[-j\beta\tau DK_n'(\tau\rho) - \dfrac{\omega\varepsilon_2 n}{\rho}CK_n(\tau\rho)\right]e^{jn\phi}e^{-j\beta z} & (6) \\ H_{\phi 2} = \left[-j\omega\varepsilon_2\tau CK_n'(\tau\rho) + \dfrac{\beta n}{\rho}DK_n(\tau\rho)\right]e^{jn\phi}e^{-j\beta z} & (7) \\ H_{z2} = T^2V_2 = -\tau^2 DK_n(\tau\rho)e^{jn\phi}e^{-j\beta z} & (8) \end{cases}$$

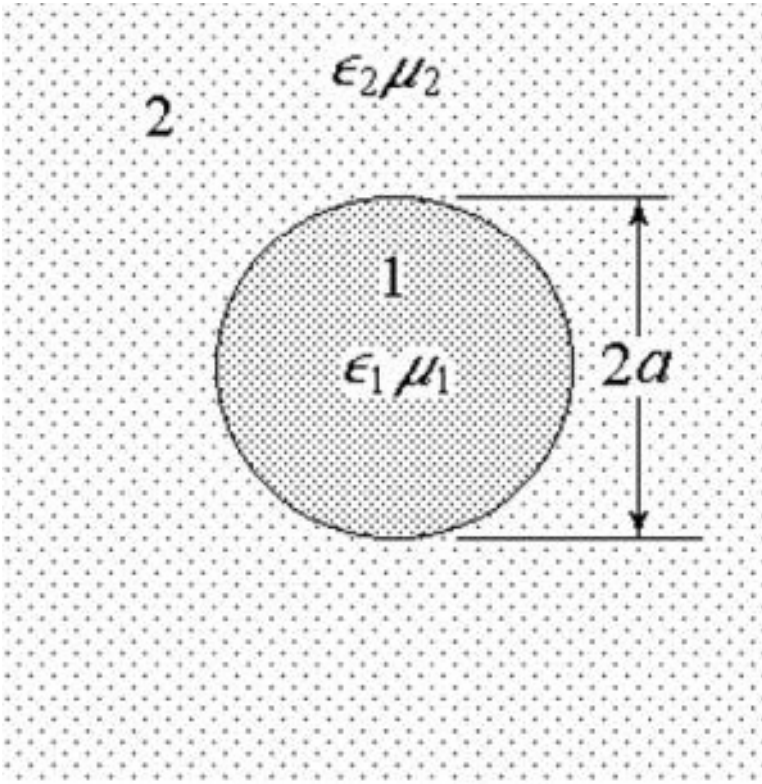

$\epsilon_1 > \epsilon_2 \quad \mu_1 \geqq \mu_2$

Ghid dielectric cilindric model pentru fibra optica - 3

$$\begin{cases} \beta^2 + T^2 = k_1^2 = \omega^2 \varepsilon_1 \mu_1 = k_0^2 n_1^2 & (1) \\ \beta^2 - \tau^2 = k_2^2 = \omega^2 \varepsilon_2 \mu_2 = k_0^2 n_2^2 & (2) \end{cases}$$

$$\begin{cases} E_{z1}(a) = E_{z2}(a) & (3) \\ H_{z1}(a) = H_{z2}(a) & (4) \\ E_{\phi 1}(a) = E_{\phi 2}(a) & (5) \\ H_{\phi 1}(a) = H_{\phi 2}(a) & (6) \end{cases}$$

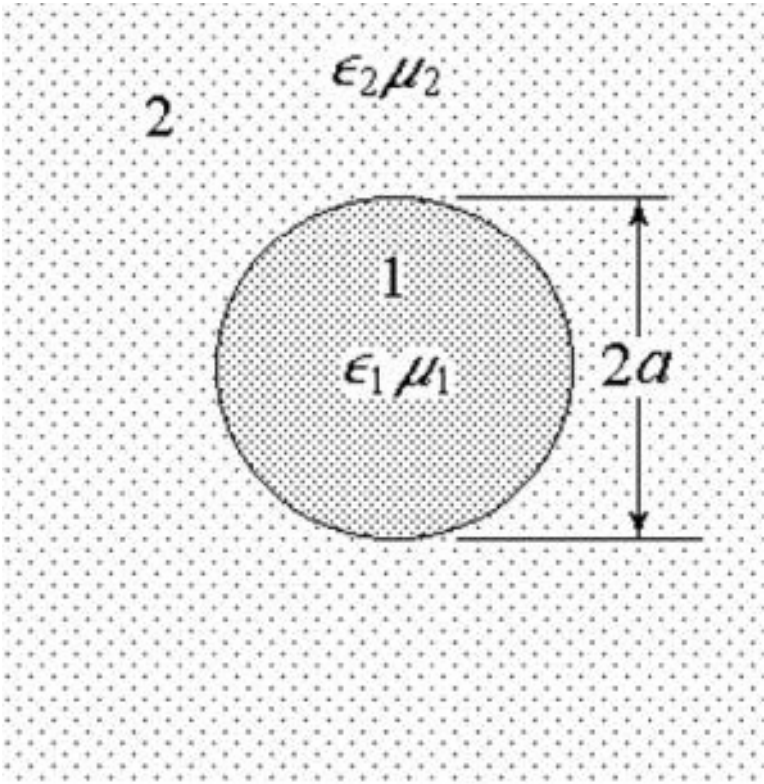

$\epsilon_1 > \epsilon_2 \quad \mu_1 \geqq \mu_2$

$$\begin{cases} T^2 J_n(Ta) A + \tau^2 K_n(\tau a) C = 0 & (7) \\ T^2 J_n(Ta) B + \tau^2 K_n(\tau a) D = 0 & (8) \\ \dfrac{\beta n}{a} J_n(Ta) A + j\omega\mu_1 T J_n'(Ta) B - \dfrac{\beta n}{a} K_n(\tau a) C - j\omega\mu_2 \tau K_n'(\tau a) D = 0 & (9) \\ -j\omega\varepsilon_1 T J_n(Ta) A + \dfrac{\beta n}{a} J_n'(Ta) B + j\omega\varepsilon_2 \tau K_n'(\tau a) C - \dfrac{\beta n}{a} K_n(\tau a) D = 0 & (10) \end{cases}$$

Ghid dielectric cilindric model pentru fibra optica - 4

$$\begin{vmatrix} T^2 J_n(Ta) & 0 & \tau^2 K_n(\tau a) & 0 \\ 0 & T^2 J_n(Ta) & 0 & \tau^2 K_n(\tau a) \\ \frac{\beta n}{a} J_n(Ta) & j\omega\mu_1 T J_n'(Ta) & -\frac{\beta n}{a} K_n(\tau a) & -j\omega\mu_2 \tau K_n'(\tau a) \\ -j\omega\varepsilon_1 T J_n'(Ta) & \frac{\beta n}{\rho} J_n(T\rho a) & j\omega\varepsilon_2 \tau K_n'(\tau a) & \frac{\beta n}{\rho} K_n(\tau a) \end{vmatrix} = 0 \quad (11)$$

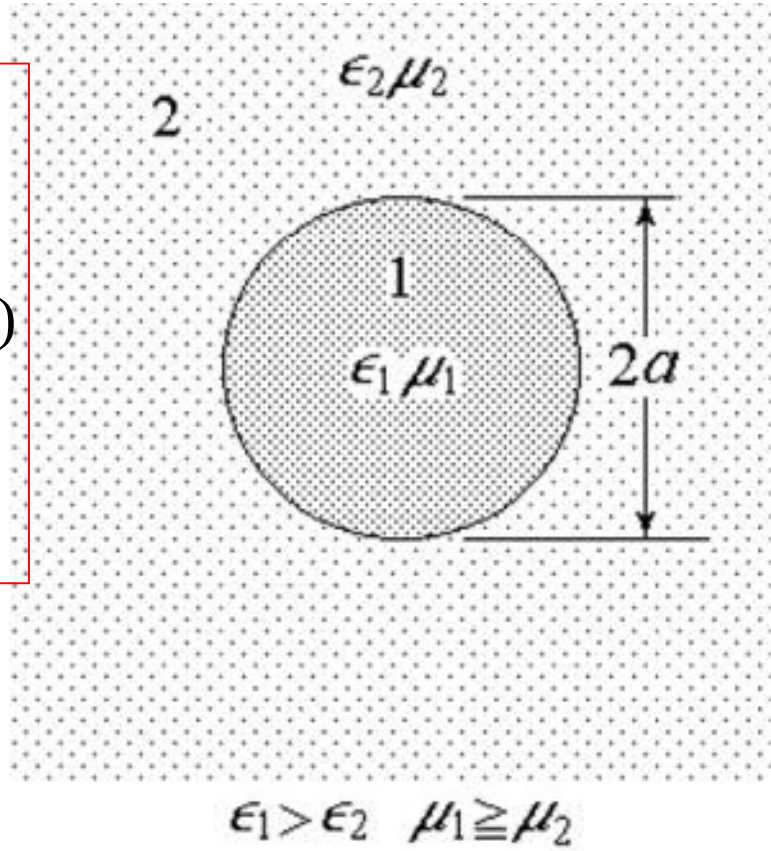

$$\left[\frac{\varepsilon_1 J_n'(Ta)}{TaJ_n(Ta)} + \frac{\varepsilon_2 K_n'(\tau a)}{\tau a K_n(\tau a)}\right]\left[\frac{\mu_1 J_n'(Ta)}{TaJ_n(Ta)} + \frac{\mu_2 K_n'(\tau a)}{\tau a K_n(\tau a)}\right] - \frac{n^2\beta^2}{\omega^2}\left[\frac{1}{(Ta)^2} + \frac{1}{(\tau a)^2}\right] = 0 \quad (12)$$

Ghid dielectric cilindric model pentru fibra optica - 5

$$\beta^2\left[(Ta)^{-2}+(\tau a)^{-2}\right]=\frac{k_1^2}{(Ta)^2}+\frac{k_2^2}{(\tau a)^2}=\omega^2\left(\frac{\mu_1\varepsilon_1}{(Ta)^2}+\frac{\mu_2\varepsilon_2}{(\tau a)^2}\right) \quad (13)$$

$$\left[\frac{\varepsilon_1 J_n'(Ta)}{TaJ_n(Ta)}+\frac{\varepsilon_2 K_n'(\tau a)}{\tau a K_n(\tau a)}\right]\left[\frac{\mu_1 J_n'(Ta)}{TaJ_n(Ta)}+\frac{\mu_2 K_n'(\tau a)}{\tau a K_n(\tau a)}\right]-n^2\left[\frac{\varepsilon_1\mu_1}{(Ta)^2}+\frac{\varepsilon_2\mu_2}{(\tau a)^2}\right]\left[\frac{1}{(Ta)^2}+\frac{1}{(\tau a)^2}\right]=0 \quad (14)$$

$$T^2+\tau^2=k_1^2-k_2^2=\omega^2a^2\left(\mu_1\varepsilon_1-\mu_2\varepsilon_2\right) \quad (15) \quad sau \quad (Ta)^2+(\tau a)^2=V^2 \quad (16)$$

$$V\overset{n}{=}\omega a\sqrt{\left(\mu_1\varepsilon_1-\mu_2\varepsilon_2\right)} \quad (17)$$

$$b=\frac{\beta/k_0-n_2}{n_1-n_2}=\frac{\bar{n}-n_2}{n_1-n_2} \quad (17')$$

$$\Downarrow$$

$$T,\tau$$

V = frecventa normalizata pentru ghidul circular dielectric

B = constanta de propagare normalizata pentru ghidul circular dielectric

Ghid dielectric cilindric model pentru fibra optica - 6

$$\chi = \frac{\dfrac{\varepsilon_{r1} J_n'(Ta)}{TaJ_n(Ta)} + \dfrac{\varepsilon_{r2} K_n'(\tau a)}{\tau a K_n(\tau a)}}{n\left[\dfrac{\varepsilon_{r1}\mu_{r1}}{(Ta)^2} + \dfrac{\varepsilon_{r2}\mu_{r2}}{(\tau a)^2}\right]} = \frac{n\left[\dfrac{1}{(Ta)^2} + \dfrac{1}{(\tau a)^2}\right]}{\dfrac{\mu_{r1} J_n'(Ta)}{TaJ_n(Ta)} + \dfrac{\mu_{r2} K_n'(\tau a)}{\tau a K_n(\tau a)}} \quad (17)$$

$$\chi = \frac{\omega\sqrt{\varepsilon_0\mu_0}}{\beta} \frac{\sqrt{\dfrac{\varepsilon_{r1} J_n'(Ta)}{TaJ_n(Ta)} + \dfrac{\varepsilon_{r2} K_n'(\tau a)}{\tau a K_n(\tau a)}}}{\sqrt{\dfrac{\mu_{r1} J_n'(Ta)}{TaJ_n(Ta)} + \dfrac{\mu_{r2} K_n'(\tau a)}{\tau a K_n(\tau a)}}} \quad (18)$$

$$\frac{C}{A} = \frac{D}{B} = -\frac{T^2 J_n(Ta)}{\tau^2 K_n(\tau a)} \quad (19)$$

$$\frac{H_z}{E_z} = \frac{B}{A} = \frac{D}{C} = \frac{j\beta\chi}{\omega\mu_0} = j\sqrt{\frac{\varepsilon_0}{\mu_0}} \frac{\sqrt{\dfrac{\varepsilon_{r1} J_n'(Ta)}{TaJ_n(Ta)} + \dfrac{\varepsilon_{r2} K_n'(\tau a)}{\tau a K_n(\tau a)}}}{\sqrt{\dfrac{\mu_{r1} J_n'(Ta)}{TaJ_n(Ta)} + \dfrac{\mu_{r2} K_n'(\tau a)}{\tau a K_n(\tau a)}}} \quad (20)$$

$$\begin{cases} Z_n(x) = \dfrac{x}{2n}\left[Z_{n-1}(x) + Z_{n+1}(x)\right] \\ Z_n'(x) = \dfrac{1}{2}\left[Z_{n-1}(x) - Z_{n+1}(x)\right] \end{cases} ; Z_n(x) = J_n(x), N_n(x), H_n^{(1)}(x), H_n^{(2)}(x)$$

Ghid dielectric cilindric model pentru fibra optica - Cimpurile in miez

$$
\begin{cases}
E_{\rho 1} = j\beta TA\left[\dfrac{1+\mu_{r1}\chi}{2}J_{n+1}(T\rho)-\dfrac{1-\mu_{r1}\chi}{2}J_{n-1}(T\rho)\right]e^{jn\phi}e^{-j\beta z} & (21)\\
E_{\phi 1} = \beta TA\left[\dfrac{1+\mu_{r1}\chi}{2}J_{n+1}(T\rho)+\dfrac{1-\mu_{r1}\chi}{2}J_{n-1}(T\rho)\right]e^{jn\phi}e^{-j\beta z} & (22)\\
E_{z1} = T^2 AJ_n(T\rho)e^{jn\phi}e^{-j\beta z} & (23)\\
H_{\rho 1} = -\dfrac{\beta^2 TA}{\omega\mu_0}\left[\dfrac{\chi+\dfrac{k^2}{\beta^2}\varepsilon_{r1}}{2}J_{n+1}(T\rho)-\dfrac{\chi-\dfrac{k^2}{\beta^2}\varepsilon_{r1}}{2}J_{n-1}(T\rho)\right]e^{jn\phi}e^{-j\beta z} & (24)\\
H_{\phi 1} = j\dfrac{\beta^2 TA}{\omega\mu_0}\left[\dfrac{\chi+\dfrac{k^2}{\beta^2}\varepsilon_{r1}}{2}J_{n+1}(T\rho)+\dfrac{\chi-\dfrac{k^2}{\beta^2}\varepsilon_{r1}}{2}J_{n-1}(T\rho)\right]e^{jn\phi}e^{-j\beta z} & (25)\\
H_{z1} = j\dfrac{T^2\beta\chi}{\omega\mu_0}AJ_n(T\rho)e^{jn\phi}e^{-j\beta z} & (26)
\end{cases}
$$

$$
\begin{cases}
\chi = \dfrac{\omega\sqrt{\varepsilon_0\mu_0}}{\beta}\dfrac{\sqrt{\dfrac{\varepsilon_{r1}J_n'(Ta)}{TaJ_n(Ta)}+\dfrac{\varepsilon_{r2}K_n'(\tau a)}{\tau aK_n(\tau a)}}}{\sqrt{\dfrac{\mu_{r1}J_n'(Ta)}{TaJ_n(Ta)}+\dfrac{\mu_{r2}K_n'(\tau a)}{\tau aK_n(\tau a)}}}\\
k^2 = \omega^2\varepsilon_0\mu_0
\end{cases}
$$

Ghid dielectric cilindric model pentru fibra optica
Cimpurile in teaca

$$
\begin{cases}
E_{\rho 2} = j\beta\tau C\left[\dfrac{1+\mu_{r2}\chi}{2}K_{n+1}(\tau\rho)+\dfrac{1-\mu_{r2}\chi}{2}K_{n-1}(\tau\rho)\right]e^{jn\phi}e^{-j\beta z} & (27)\\
E_{\phi 2} = \beta\tau C\left[\dfrac{1+\mu_{r2}\chi}{2}K_{n+1}(T\rho)-\dfrac{1-\mu_{r2}\chi}{2}K_{n-1}(\tau\rho)\right]e^{jn\phi}e^{-j\beta z} & (28)\\
E_{z2} = \tau^2 C K_n(\tau\rho)e^{jn\phi}e^{-j\beta z} & (29)\\
H_{\rho 2} = -\dfrac{\beta^2\tau C}{\omega\mu_0}\left[\dfrac{\chi+\dfrac{k^2}{\beta^2}\varepsilon_{r2}}{2}K_{n+1}(\tau\rho)+\dfrac{\chi-\dfrac{k^2}{\beta^2}\varepsilon_{r2}}{2}K_{n-1}(\tau\rho)\right]e^{jn\phi}e^{-j\beta z} & (30)\\
H_{\phi 2} = j\dfrac{\beta^2\tau C}{\omega\mu_0}\left[\dfrac{\chi+\dfrac{k^2}{\beta^2}\varepsilon_{r2}}{2}K_{n+1}(\tau\rho)-\dfrac{\chi-\dfrac{k^2}{\beta^2}\varepsilon_{r2}}{2}K_{n-1}(\tau\rho)\right]e^{jn\phi}e^{-j\beta z} & (31)\\
H_{z2} = -j\dfrac{\tau^2\beta\chi}{\omega\mu_0}CK_n(\tau\rho)e^{jn\phi}e^{-j\beta z} & (32)
\end{cases}
$$

$$
\begin{cases}
\chi = \dfrac{\omega\sqrt{\varepsilon_0\mu_0}}{\beta}\dfrac{\sqrt{\dfrac{\varepsilon_{r1}J_n'(Ta)}{TaJ_n(Ta)}+\dfrac{\varepsilon_{r2}K_n'(\tau a)}{\tau aK_n(\tau a)}}}{\sqrt{\dfrac{\mu_{r1}J_n'(Ta)}{TaJ_n(Ta)}+\dfrac{\mu_{r2}K_n'(\tau a)}{\tau aK_n(\tau a)}}}\\
k^2 = \omega^2\varepsilon_0\mu_0
\end{cases}
$$

Ghid dielectric cilindric model pentru fibra optica

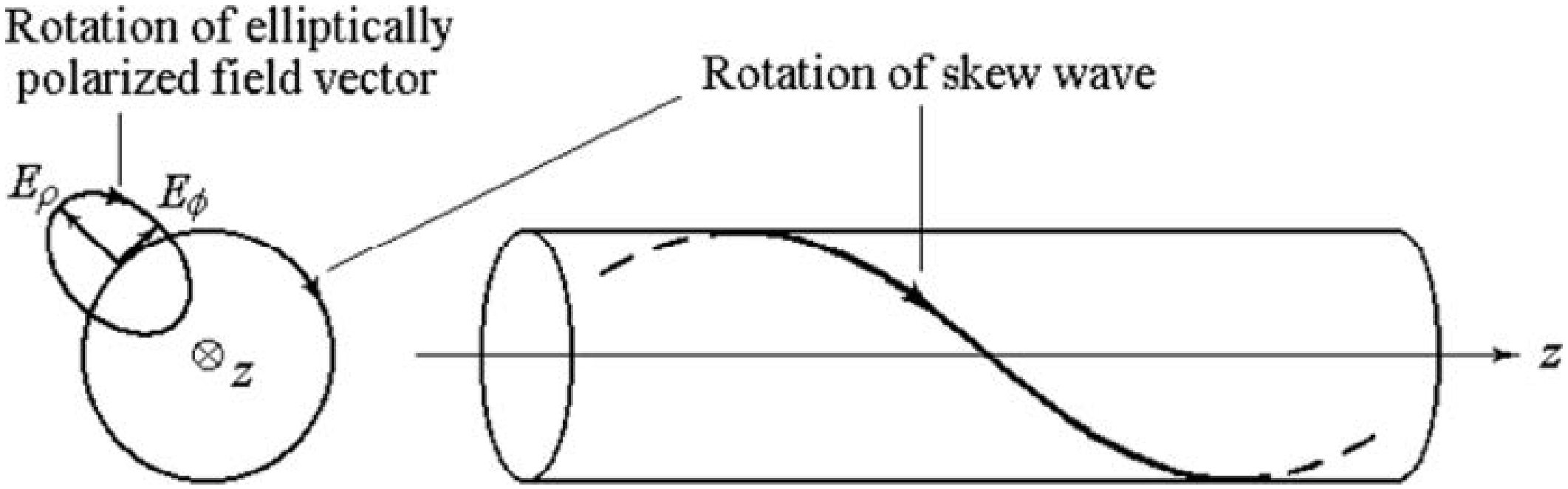

Rezolvarea ecuatiei de valori proprii
Conditia de taiere

$$\boxed{\begin{cases} \tau = 0 \\ T = T_c \end{cases} \quad (34)}$$

$$\left(T_C\right)^2 = \omega_c^2\left(\mu_1\varepsilon_1 - \mu_2\varepsilon_2\right) \quad , \quad \omega_C = \frac{T_C}{\sqrt{\mu_1\varepsilon_1 - \mu_2\varepsilon_2}} \quad (35)$$

Rezolvarea ecuatiei de valori proprii

$$\left[\frac{J_n'(Ta)}{TaJ_n(Ta)}\right]^2+\left[\frac{\varepsilon_1\mu_2+\varepsilon_2\mu_1}{\varepsilon_1\mu_1}\frac{K_n'(\tau a)}{\tau aK_n(\tau a)}\right]\frac{J_n'(Ta)}{TaJ_n(Ta)}$$

$$+\frac{\varepsilon_2\mu_2}{\varepsilon_1\mu_1}\left[\frac{K_n'(\tau a)}{\tau aK_n(\tau a)}\right]^2-n^2\left[\frac{1}{(Ta)^2}+\frac{\varepsilon_2\mu_2}{\varepsilon_1\mu_1(\tau a)^2}\right]\left[\frac{1}{(Ta)^2}+\frac{1}{(\tau a)^2}\right]=0 \quad (36)$$

$$\frac{J_n'(Ta)}{TaJ_n(Ta)}=-P+\sqrt{R} \quad (37)$$ Pentru moduri EH

$$\frac{J_n'(Ta)}{TaJ_n(Ta)}=-P-\sqrt{R} \quad (38)$$ Pentru moduri HE

$$P=\frac{\varepsilon_1\mu_2+\varepsilon_2\mu_1}{\varepsilon_1\mu_1}\frac{K_n'(\tau a)}{\tau aK_n(\tau a)}$$

$$R=\left(\frac{\varepsilon_1\mu_2-\varepsilon_2\mu_1}{2\varepsilon_1\mu_1}\right)^2\left[\frac{K_n'(\tau a)}{\tau aK_n(\tau a)}\right]^2-n^2\left[\frac{1}{(Ta)^2}+\frac{\varepsilon_2\mu_2}{\varepsilon_1\mu_1(\tau a)^2}\right]\left[\frac{1}{(Ta)^2}+\frac{1}{(\tau a)^2}\right]$$

Rezolvarea ecuatiei de valori proprii 2

$$\tau a = \sqrt{(k_1 a)^2 - (k_2 a)^2 - (Ta)^2} = \sqrt{\omega^2 a(\varepsilon_1\mu_1 - \varepsilon_2\mu_2) - (Ta)^2} = \sqrt{V^2 - (Ta)^2}$$

$$\frac{J_n'(Ta)}{TaJ_n(Ta)} = -P \pm \sqrt{R}$$

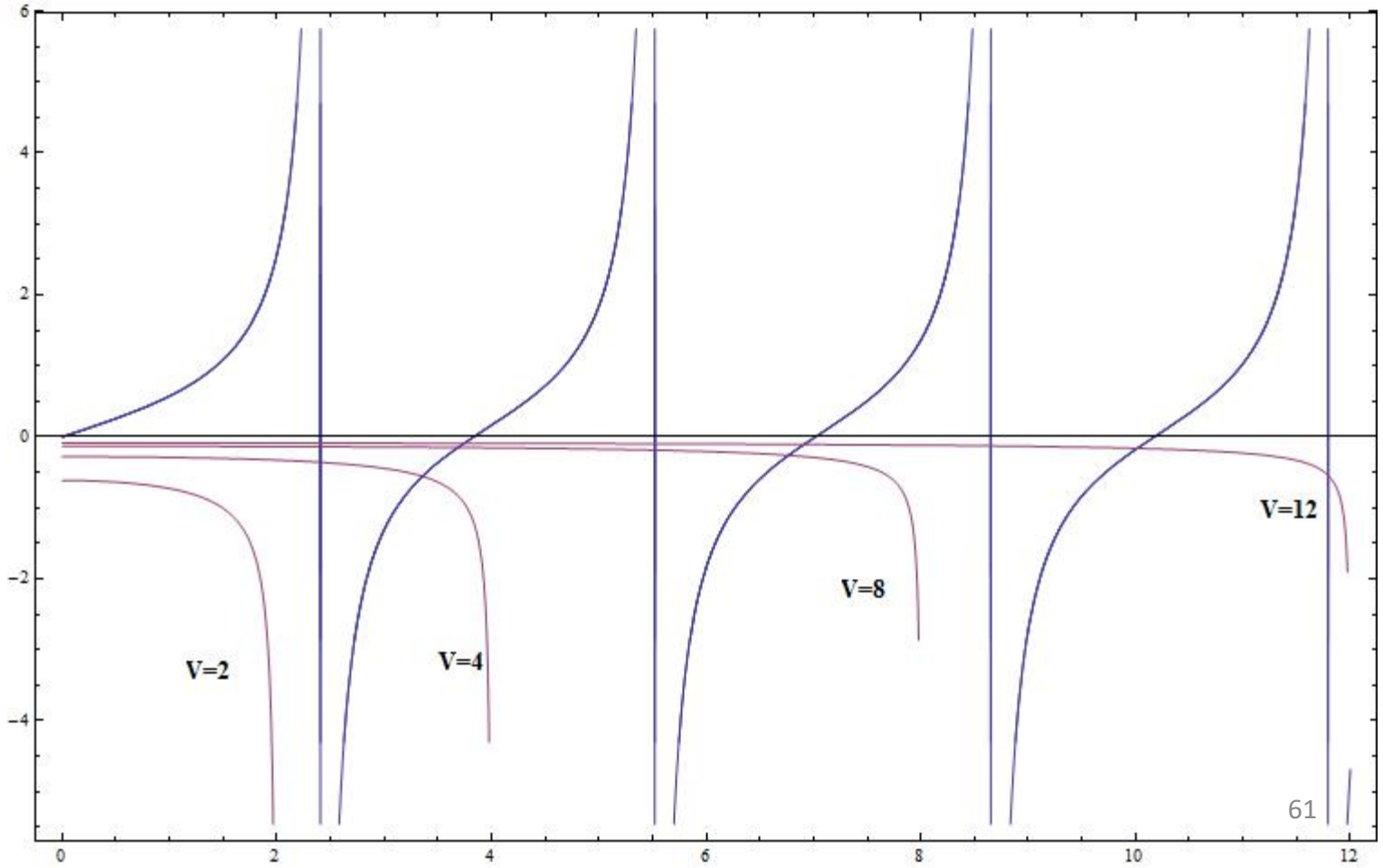

Modurile simetrice circular, TE si TM

$$\boxed{\frac{\partial}{\partial \phi} = 0 \quad (37)}$$

Moduri TE si TM

$$\frac{\partial}{\partial \phi} \neq 0 \quad (38)$$

Moduri HEM

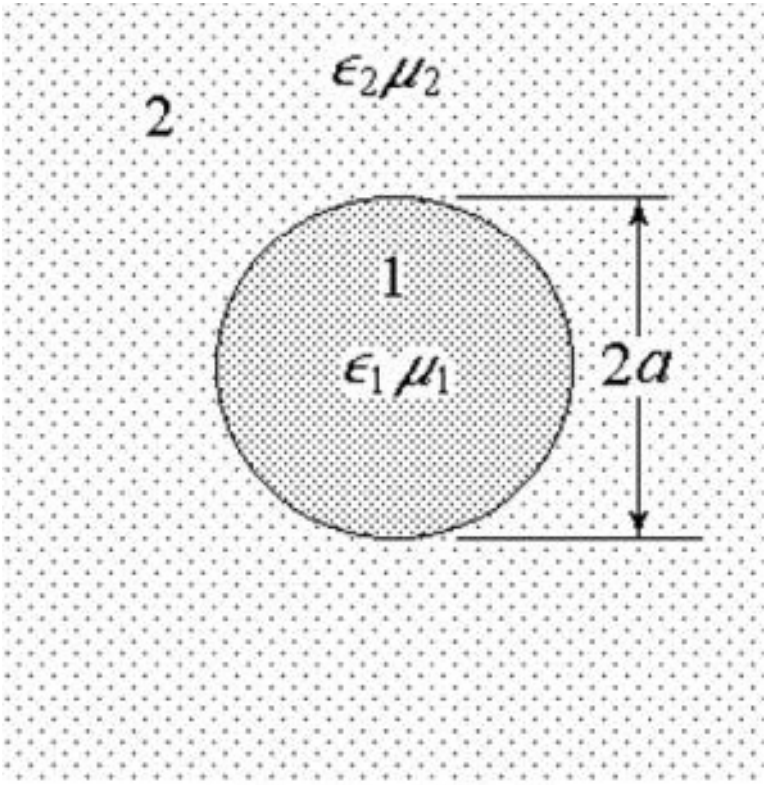

$\epsilon_1 > \epsilon_2 \quad \mu_1 \geqq \mu_2$

Modurile TE si TM

$$\frac{\partial}{\partial \phi} = 0 \Leftrightarrow n = 0$$

$$\begin{cases} J_0'(x) = -J_1(x) \\ K_0'(x) = -K_1(x) \end{cases}$$

$$\boxed{\left[\frac{\varepsilon_1 J_1(Ta)}{TaJ_0(Ta)} + \frac{\varepsilon_2 K_1(\tau a)}{\tau a K_0(\tau a)}\right]\left[\frac{\mu_1 J_1(Ta)}{TaJ_0(Ta)} + \frac{\mu_2 K_1(\tau a)}{\tau a K_0(\tau a)}\right] = 0 \quad (39)}$$

$$\boxed{\begin{cases} \dfrac{J_1(Ta)}{J_0(Ta)} = -\dfrac{\varepsilon_2 TaK_1(\tau a)}{\varepsilon_1 \tau a K_0(\tau a)} & (40) \\ \dfrac{J_1(Ta)}{J_0(Ta)} = -\dfrac{\mu_2 TaK_1(\tau a)}{\mu_1 \tau a K_0(\tau a)} & (41) \end{cases}}$$

Pentru moduri TM

Pentru moduri TE

Modurile TE si TM - 2

$$\chi = \frac{\omega\sqrt{\varepsilon_0\mu_0}}{\beta}\frac{\sqrt{\dfrac{\varepsilon_{r1}J_1(Ta)}{TaJ_0(Ta)}+\dfrac{\varepsilon_{r2}K_1(\tau a)}{\tau aK_0(\tau a)}}}{\sqrt{\dfrac{\mu_{r1}J_1(Ta)}{TaJ_0(Ta)}+\dfrac{\mu_{r2}K_1(\tau a)}{\tau aK_0(\tau a)}}} \quad (42)$$

$$k^2 = \omega^2\varepsilon_0\mu_0$$

$$\frac{H_z}{E_z} = \frac{j\beta\chi}{\omega\mu_0} \quad (43)$$

Pentru moduri TM $\chi \to 0 \Rightarrow H_z = 0$

Pentru moduri TE $\chi \to \infty \Rightarrow E_z = 0$

Modurile TE si TM - 3

$$\begin{cases} \dfrac{J_1(Ta)}{J_0(Ta)} = -\dfrac{\varepsilon_2 Ta K_1(\tau a)}{\varepsilon_1 \tau a K_0(\tau a)} & (40) \\ \dfrac{J_1(Ta)}{J_0(Ta)} = -\dfrac{\mu_2 Ta K_1(\tau a)}{\mu_1 \tau a K_0(\tau a)} & (41) \end{cases}$$

$$0 \le Ta \le V$$

$$V = \omega a \sqrt{(\mu_1 \varepsilon_1 - \mu_2 \varepsilon_2)}$$

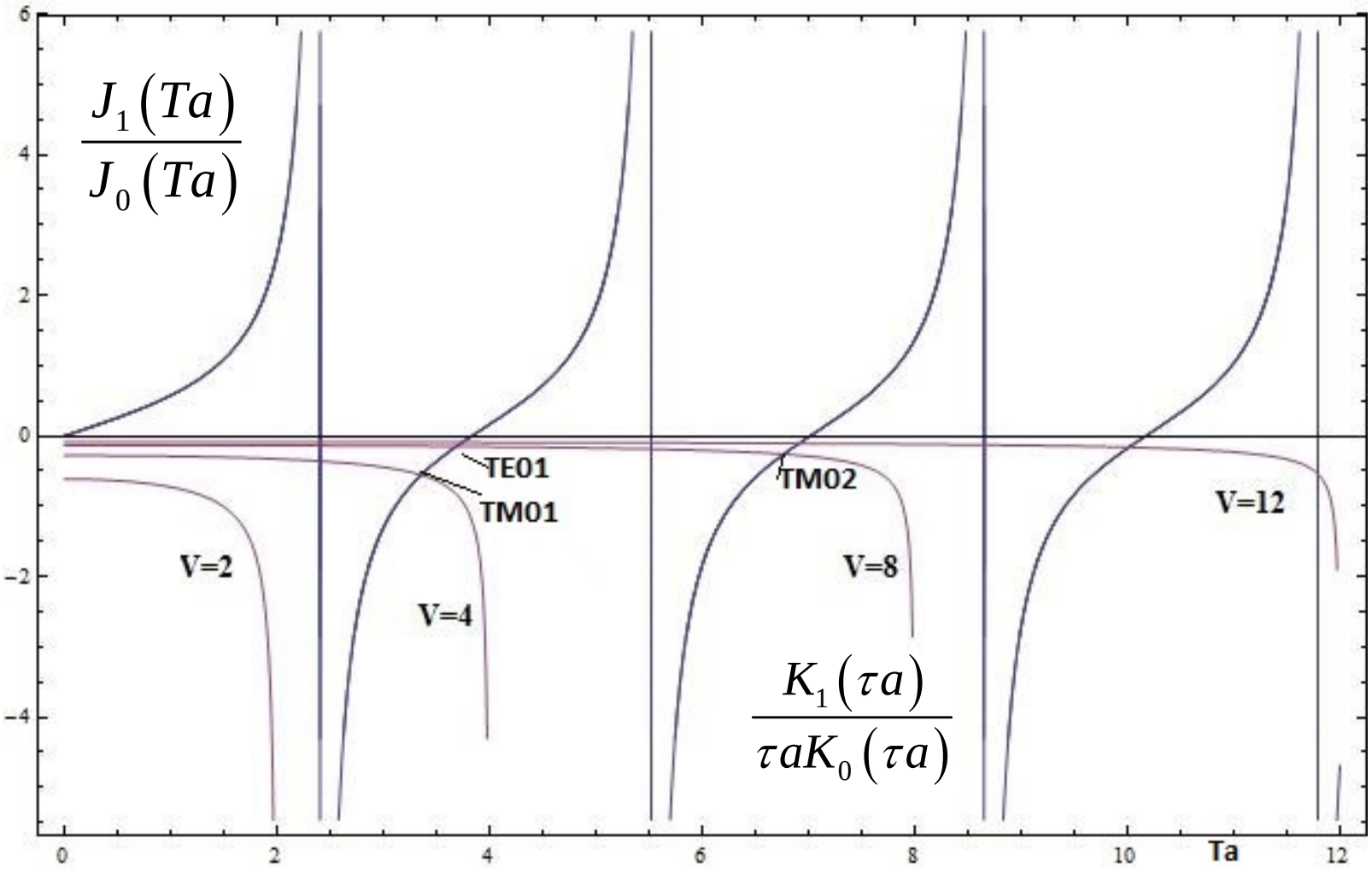

Conditiile de taiere pentru modurile TE si TM

$$\tau = 0\,,\; n = 0$$

$$\lim_{x\to 0} K_0(x) = \ln\left(\frac{2}{\gamma x}\right) \quad , \quad \lim_{x\to 0} K_1(x) = \frac{1}{x} \quad , \quad \gamma = 1.781 \qquad \lim_{\tau a\to 0}\frac{\tau a K_0(\tau a)}{K_1(\tau a)} = \lim_{\tau a\to 0}\left[(\tau a)^2 \ln\frac{2}{\gamma\tau a}\right] = 0$$

$$\begin{cases} \dfrac{\varepsilon_2 Ta J_0(Ta)}{\varepsilon_1 J_1(Ta)} = 0 & (44) \\[2ex] \dfrac{\mu_2 Ta J_0(Ta)}{\mu_1 J_1(Ta)} = 0 & (45) \end{cases}$$

$$J_0(Ta) = 0,\; T_c = \frac{x_{0m}}{a} \qquad (46)$$

$$x_{01} = 2.405$$
$$x_{02} = 5.520$$
$$x_{03} = 8.654$$
$$x_{0m} \approx \left(m - \frac{1}{4}\right)\pi,\; m \geq 4$$

$$\omega_c = \frac{x_{0m}}{a\sqrt{(\mu_1\varepsilon_1 - \mu_2\varepsilon_2)}} \qquad (47)$$

Ghidul dielectric circular nemagnetic

$$\mu_1 = \mu_2 = \mu_0$$

$$\left[\frac{\varepsilon_1 J_n'(Ta)}{TaJ_n(Ta)} + \frac{\varepsilon_2 K_n'(\tau a)}{\tau a K_n(\tau a)}\right]\left[\frac{J_n'(Ta)}{TaJ_n(Ta)} + \frac{K_n'(\tau a)}{\tau a K_n(\tau a)}\right] - n^2\left[\frac{\varepsilon_1}{(Ta)^2} + \frac{\varepsilon_2}{(\tau a)^2}\right]\left[\frac{1}{(Ta)^2} + \frac{1}{(\tau a)^2}\right] = 0 \quad (48)$$

$$\left[\frac{\varepsilon_1 J_{n+1}(Ta)}{TaJ_n(Ta)} + \frac{\varepsilon_2 K_{n+1}(\tau a)}{\tau a K_n(\tau a)}\right]\left[\frac{J_{n-1}(Ta)}{TaJ_n(Ta)} - \frac{K_{n-1}(\tau a)}{\tau a K_n(\tau a)}\right] + \left[\frac{\varepsilon_1 J_{n-1}(Ta)}{TaJ_n(Ta)} - \frac{\varepsilon_2 K_{n-1}(\tau a)}{\tau a K_n(\tau a)}\right]\left[\frac{J_{n+1}(Ta)}{TaJ_n(Ta)} + \frac{K_{n+1}(\tau a)}{\tau a K_n(\tau a)}\right] = 0 \quad (49)$$

Ghidul dielectric circular nemagnetic - 2

$$\frac{J_{n+1}(Ta)}{J_n(Ta)} = Ta\left[P + \frac{n}{(Ta)^2} - \sqrt{R}\right] \quad (50)$$

Pentru moduri EH

$$\bar{\varepsilon} = \frac{\varepsilon_1 + \varepsilon_2}{2}$$

$$\frac{J_{n-1}(Ta)}{J_n(Ta)} = Ta\left[-P + \frac{n}{(Ta)^2} - \sqrt{R}\right] \quad (51)$$

Pentru moduri HE

$$\Delta\varepsilon = \frac{\varepsilon_1 - \varepsilon_2}{2}$$

$$P = \frac{\bar{\varepsilon}}{\varepsilon_1}\frac{K_n'(\tau a)}{\tau a K_n(\tau a)} = \frac{\bar{\varepsilon}}{\varepsilon_1}\left[\frac{n}{(\tau a)^2} - \frac{K_{n+1}(\tau a)}{\tau a K_n(\tau a)}\right] = \frac{\bar{\varepsilon}}{\varepsilon_1}\left[-\frac{n}{(\tau a)^2} - \frac{K_{n-1}(\tau a)}{\tau a K_n(\tau a)}\right]$$

$$R = \left(\frac{\Delta\varepsilon}{\varepsilon_1}\right)^2\left[\frac{K_n'(\tau a)}{\tau a K_n(\tau a)}\right]^2 + n^2\left[\frac{1}{(Ta)^2} + \frac{\varepsilon_2}{\varepsilon_1(\tau a)^2}\right]\left[\frac{1}{(Ta)^2} + \frac{1}{(\tau a)^2}\right]$$

$$= \left\{\frac{\Delta\varepsilon}{\varepsilon_1}\left[\frac{n}{(\tau a)^2} - \frac{K_{n+1}(\tau a)}{\tau a K_n(\tau a)}\right]\right\}^2 + n^2\left[\frac{1}{(Ta)^2} + \frac{\varepsilon_2}{\varepsilon_1(\tau a)^2}\right]\left[\frac{1}{(Ta)^2} + \frac{1}{(\tau a)^2}\right]$$

$$= \left\{\frac{\Delta\varepsilon}{\varepsilon_1}\left[-\frac{n}{(\tau a)^2} - \frac{K_{n-1}(\tau a)}{\tau a K_n(\tau a)}\right]\right\}^2 + n^2\left[\frac{1}{(Ta)^2} + \frac{\varepsilon_2}{\varepsilon_1(\tau a)^2}\right]\left[\frac{1}{(Ta)^2} + \frac{1}{(\tau a)^2}\right]$$

Ghidul dielectric circular nemagnetic

$$n = 1$$

$$\frac{J_2(Ta)}{J_1(Ta)} = Ta\left[P + \frac{1}{(Ta)^2} - \sqrt{R}\right] \quad (52)$$

Pentru moduri EH

$$\frac{J_0(Ta)}{J_1(Ta)} = Ta\left[-P + \frac{1}{(Ta)^2} - \sqrt{R}\right] \quad (53)$$

Pentru moduri HE

$$P = \frac{\bar{\varepsilon}}{\varepsilon_1}\left[\frac{1}{(\tau a)^2} - \frac{K_2(\tau a)}{\tau a K_1(\tau a)}\right] \qquad R = \left\{\frac{\Delta\varepsilon}{\varepsilon_1}\left[\frac{1}{(\tau a)^2} - \frac{K_2(\tau a)}{\tau a K_1(\tau a)}\right]\right\}^2 + \left[\frac{1}{(Ta)^2} + \frac{\varepsilon_2}{\varepsilon_1(\tau a)^2}\right]\left[\frac{1}{(Ta)^2} + \frac{1}{(\tau a)^2}\right]$$

$$J_1(Ta) = 0, \begin{cases} Ta = 0 \\ T_c a = x_{1m'} = V \Rightarrow \omega_c = \dfrac{x_{1p}}{a\mu_0\sqrt{\varepsilon_1 - \varepsilon_2}} \end{cases} \quad (54)$$

$$x_{11} = 3.83171$$
$$x_{12} = 7.01559$$
$$x_{13} = 10.1735$$

$$x_{1m} \approx \left(m + \frac{1}{4}\right)\pi, m \geq 4$$

Fibre monomod

$$J_0\left(T_c a\right) = J_0\left(V_c\right) = 0$$

$$V < 2.405$$

$$\omega a\sqrt{\mu_0\left(\varepsilon_1 - \varepsilon_2\right)} < 2.405 \qquad \frac{2\pi}{\lambda} ca\sqrt{\mu_0\varepsilon_0\left(\varepsilon_{r1} - \varepsilon_{r2}\right)} < 2.405$$

$$\frac{2\pi}{\lambda} a\sqrt{n_1^2 - n_2^2} < 2.405 \qquad \boxed{\frac{2\pi}{\lambda} an_1\sqrt{2\Delta} < 2.405 \quad (55)} \qquad \Delta = \frac{n_1 - n_2}{n_1}$$

Fibre monomod - Exemplu

$$\boxed{\frac{2\pi}{\lambda} a n_1 \sqrt{2\Delta} < 2.405 \quad (55)}$$

$$\Delta = \frac{n_1 - n_2}{n_1}$$

λ =1.2µm, n1=1.45, Δ=5x10E-3

$$a < \frac{2.405 * 1.2}{2\pi 1.45 \cdot \sqrt{2 \cdot 5 \cdot 10^{-3}}} = 3.16 \mu m$$

Cimpurile in fibra monomod (HE_{11})

$$\frac{n_1 - n_2}{n_1} = \Delta \ll 1 \quad (56)$$

$$\varepsilon_1 \approx \varepsilon_2, \beta \approx k_1 \quad (57)$$

$$\boxed{n = +1, \chi = -1}$$

$$\begin{cases} E_{\rho 1} = -jk_1 TAJ_0(T\rho)e^{j\phi}e^{-j\beta z} \\ E_{\phi 1} = k_1 TAJ_0(T\rho)e^{j\phi}e^{-j\beta z} \\ E_{z1} = T^2 AJ_1(T\rho)e^{j\phi}e^{-j\beta z} \\ H_{\rho 1} = -\dfrac{k_1 TA}{\eta_1} J_0(T\rho)e^{j\phi}e^{-j\beta z} \\ H_{\phi 1} = -j\dfrac{k_1 TA}{\eta_1} J_0(T\rho)e^{j\phi}e^{-j\beta z} \\ H_{z1} = -j\dfrac{T^2 A}{\eta_1} J_1(T\rho)e^{j\phi}e^{-j\beta z} \end{cases}$$

$$\boxed{n = -1, \chi = +1}$$

$$\begin{cases} E_{\rho 1} = jk_1 TAJ_0(T\rho)e^{-j\phi}e^{-j\beta z} \\ E_{\phi 1} = k_1 TAJ_0(T\rho)e^{-j\phi}e^{-j\beta z} \\ E_{z1} = -T^2 AJ_1(T\rho)e^{-j\phi}e^{-j\beta z} \\ H_{\rho 1} = -\dfrac{k_1 TA}{\eta_1} J_0(T\rho)e^{-j\phi}e^{-j\beta z} \\ H_{\phi 1} = j\dfrac{k_1 TA}{\eta_1} J_0(T\rho)e^{j\phi}e^{-j\beta z} \\ H_{z1} = -j\dfrac{T^2 A}{\eta_1} J_1(T\rho)e^{-j\phi}e^{-j\beta z} \end{cases}$$

Cimpurile in fibra monomod
Modul LP_{01}

$$\begin{cases} E_{\rho 1} = 2k_1 TAJ_0(T\rho)\sin\phi e^{-j\beta z} \\ E_{\phi 1} = 2k_1 TAJ_0(T\rho)\cos\phi e^{-j\beta z} \\ E_{z1} = j2T^2 AJ_1(T\rho)\sin\phi e^{-j\beta z} \\ H_{\rho 1} = -2\dfrac{k_1 TA}{\eta_1} J_0(T\rho)\cos\phi e^{-j\beta z} \\ H_{\phi 1} = 2\dfrac{k_1 TA}{\eta_1} J_0(T\rho)\sin\phi e^{-j\beta z} \\ H_{z1} = -j2\dfrac{T^2 A}{\eta_1} J_1(T\rho)\cos\phi e^{-j\beta z} \end{cases} \quad (58)$$

$$\begin{cases} E_{y1} = E_0 J_0(T\rho)e^{-j\beta z} \\ E_{z1} = j\dfrac{T}{k_1} E_0 J_1(T\rho)\sin\phi e^{-j\beta z} \\ H_{x1} = -\dfrac{E_0}{\eta_1} J_0(T\rho)e^{-j\beta z} \\ H_{z1} = -j\dfrac{T}{\omega\mu_0} E_0 J_1(T\rho)\cos\phi e^{-j\beta z} \end{cases} \quad (59)$$

$$E_0 = 2k_1 TA$$

$$\beta \approx k_1$$

Cimpurile in fibra monomod - Modul LP_{01}

$$\boxed{\begin{cases} E_{y1} = E_0 J_0\left(T\rho\right)e^{-j\beta z} \\ H_{x1} = -\dfrac{E_0}{\eta_1} J_0\left(T\rho\right)e^{-j\beta z} \end{cases} \quad (60)}$$

$$\frac{\left|E_{y1}\right|}{\left|H_{x1}\right|} = \eta_1$$

Fibre cu salt de indice

$$n_0 \sin\theta_i = n_1 \sin\theta_r \quad (61)$$

$$\sin\phi \le \frac{n_2}{n_1} \quad (62)$$

$$\sin\phi_c = \frac{n_2}{n_1} \quad (63)$$

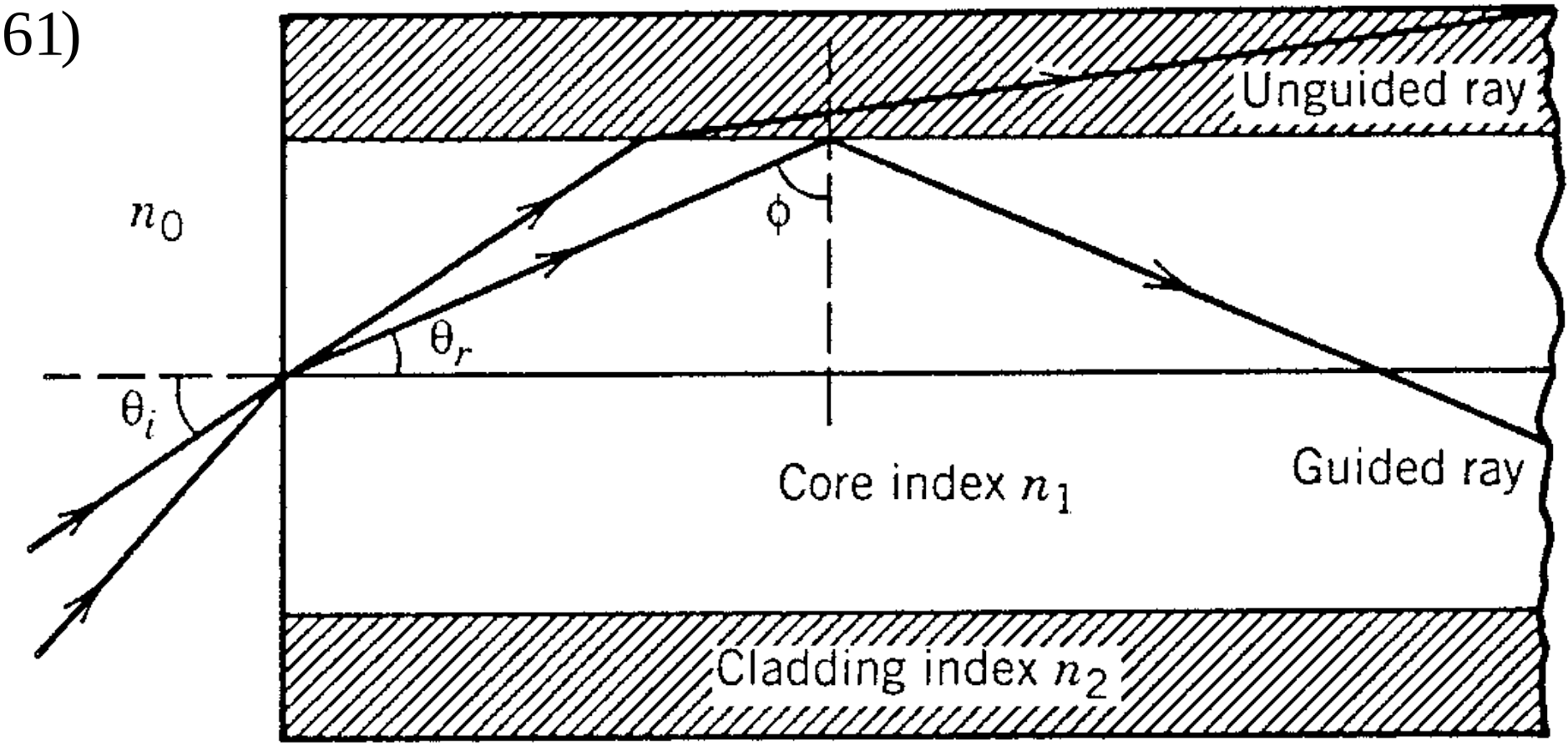

$$n_0 \sin\theta_{ic} = n_1 \sin\phi_c$$

$$= n_1 \cos\theta_c = \sqrt{n_1^2 - n_2^2} = NA \quad (64)$$

$$n_1 \approx n_2$$

$$NA = n_1\sqrt{2\Delta} \quad (65)$$

Exercitiu

Indicele de refracţie al miezului este 1.48 iar indicele de refracţie al tecii este 1.46. Care este unghiul de acceptanţă al fibrei?

Solutie

$$\sin\theta_{\mathrm{ic}} = \sqrt{1.48^2 - 1.46^2} = 0.2425$$

$$\theta_{\mathrm{ic}} = \mathrm{Arcsin}\left(0.2425\right) = 14.033^\circ$$

$$\Theta_{\mathrm{a}} = 2\theta_{\mathrm{ic}} = 28.07^\circ$$

Dispersia intermodala a fibrei cu salt de indice

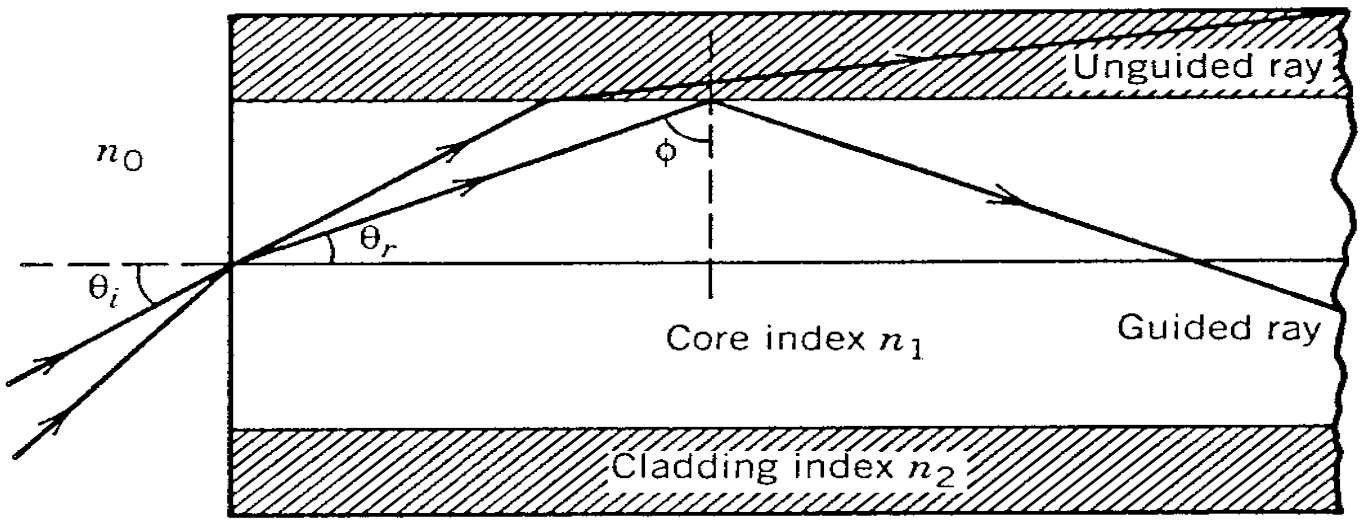

$$\Delta T = \frac{n_1}{c}\left(\frac{L}{\sin\phi_c} - L\right) = \frac{L}{c}\frac{n_1^2}{n_2}\Delta \quad (65)$$

$$\Delta T < T_B = \frac{1}{B} \quad (66)$$

$$\frac{L}{c}\frac{n_1^2}{n_2}\Delta < \frac{1}{B} \quad (67)$$

$$\boxed{BL < \frac{n_2}{n_1^2}\frac{c}{\Delta} \quad (68)}$$

EXEMPLU

$$BL < \frac{n_2}{n_1^2}\frac{c}{\Delta}$$

Fibra fara teaca: n1=1.5 si n2=1.

BL<0.4 (Mb/s)-km.

Fibra cu teaca are Δ < 0.01.

De exemplu, pentru Δ = 2*10^(3) avem BL < 100 (Mb/s)*km

Fibre multimod cu indice gradat

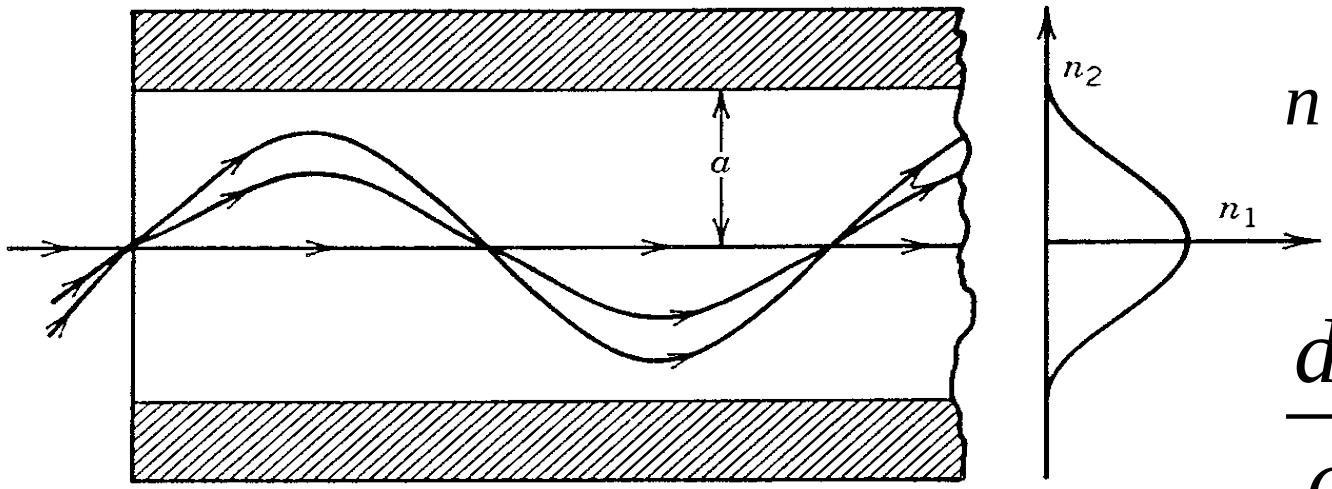

$$n(\rho)=\begin{cases} n_1\left[1-\Delta(\rho/a)^{\alpha}\right]; & \rho<a \\ n_1(1-\Delta)=n_2; & \rho\geq a \end{cases} \quad (69)$$

$$\frac{d^2\rho}{dz^2}=\frac{1}{n}\frac{dn}{d\rho} \quad (70)$$

$$\rho(z)=\rho_0\cos(pz)+(\rho_0'/p)\sin(pz) \quad (71)$$

$$p=\left(2\Delta/a^2\right)^{1/2}$$

Dispersia intermodala a fibrei cu indice gradat

$$\alpha = 2(1-\Delta)$$

$$\frac{\Delta T}{L} = \frac{n_1}{8c}\Delta^2 \quad (72)$$

$$\Delta T < T_B = \frac{1}{B} \quad (73)$$

$$\boxed{BL < \frac{8c}{n_1\Delta^2} \quad (74)}$$

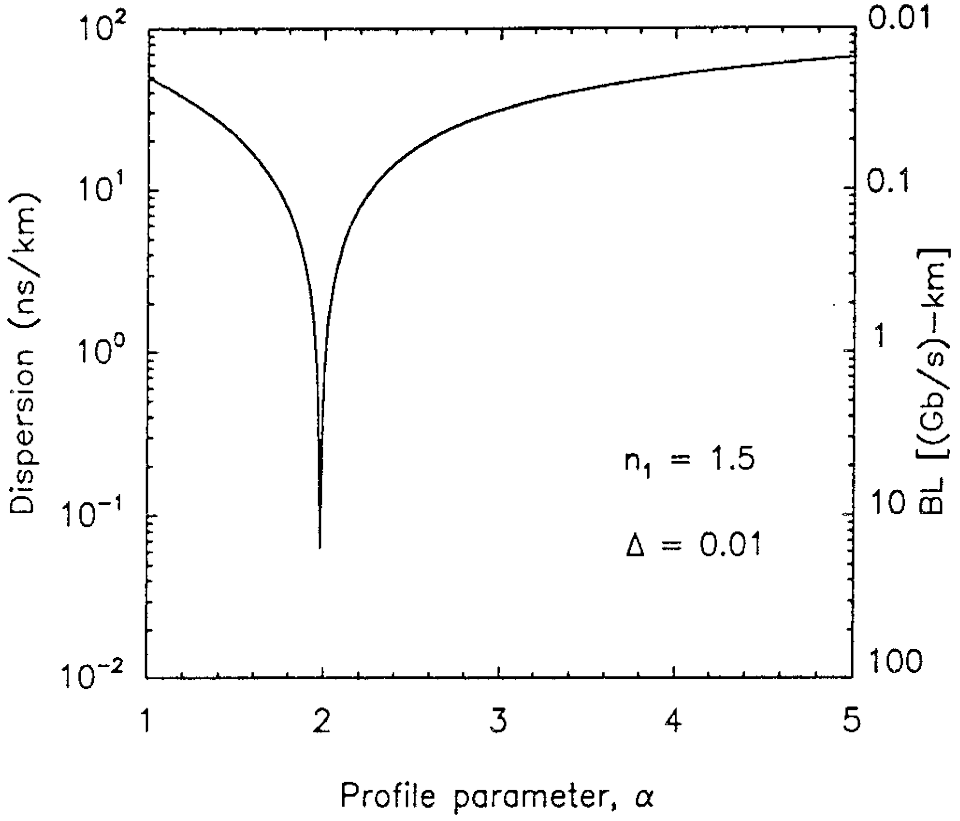

DISPERSIA IN FIBRELE MONOMOD
GRUP DE UNDE

$$\nu - \nu' = \Delta\nu$$
$$u - u' = \Delta u$$

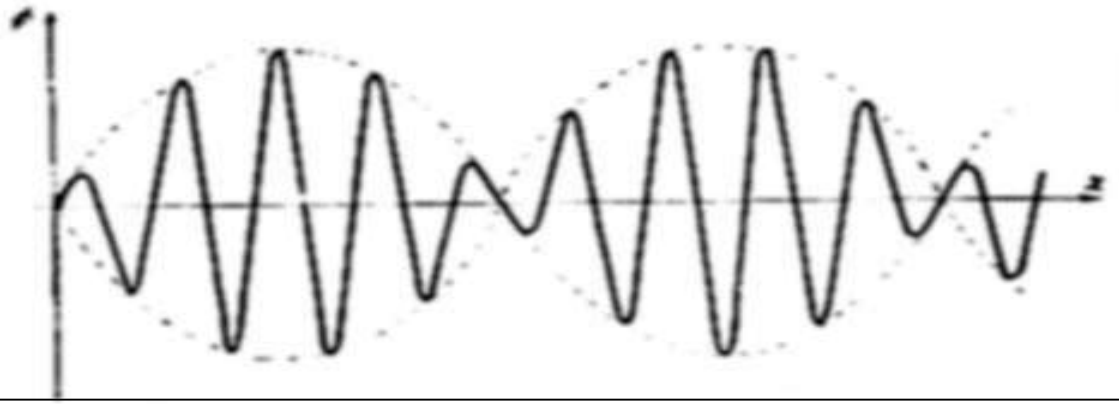

$$\boxed{\begin{aligned}\phi &= a\sin 2\pi\nu\left(t-\frac{x}{u}\right)+a\sin 2\pi\nu'\left(t-\frac{x}{u'}\right)= \\ &= 2a\sin\pi\left[t(\nu+\nu')-x\left(\frac{\nu}{u}+\frac{\nu'}{u'}\right)\right]\cos\pi\left[t(\nu-\nu')-x\left(\frac{\nu}{u}-\frac{\nu'}{u'}\right)\right]\end{aligned}}$$

$$\nu+\nu'\simeq 2\nu \qquad \frac{\nu}{u}+\frac{\nu'}{u'}\simeq 2\frac{\nu}{u} \qquad \frac{\nu}{u}-\frac{\nu'}{u'}\triangleq\Delta\left(\frac{\nu}{u}\right)$$

$$\boxed{\phi\simeq 2a\sin 2\pi\nu\left(t-\frac{x}{u}\right)\cos\pi\left[t\Delta\nu-x\Delta\left(\frac{\nu}{u}\right)\right]=A\sin 2\pi\nu\left(t-\frac{x}{u}\right)}$$

GRUP DE UNDE - 2

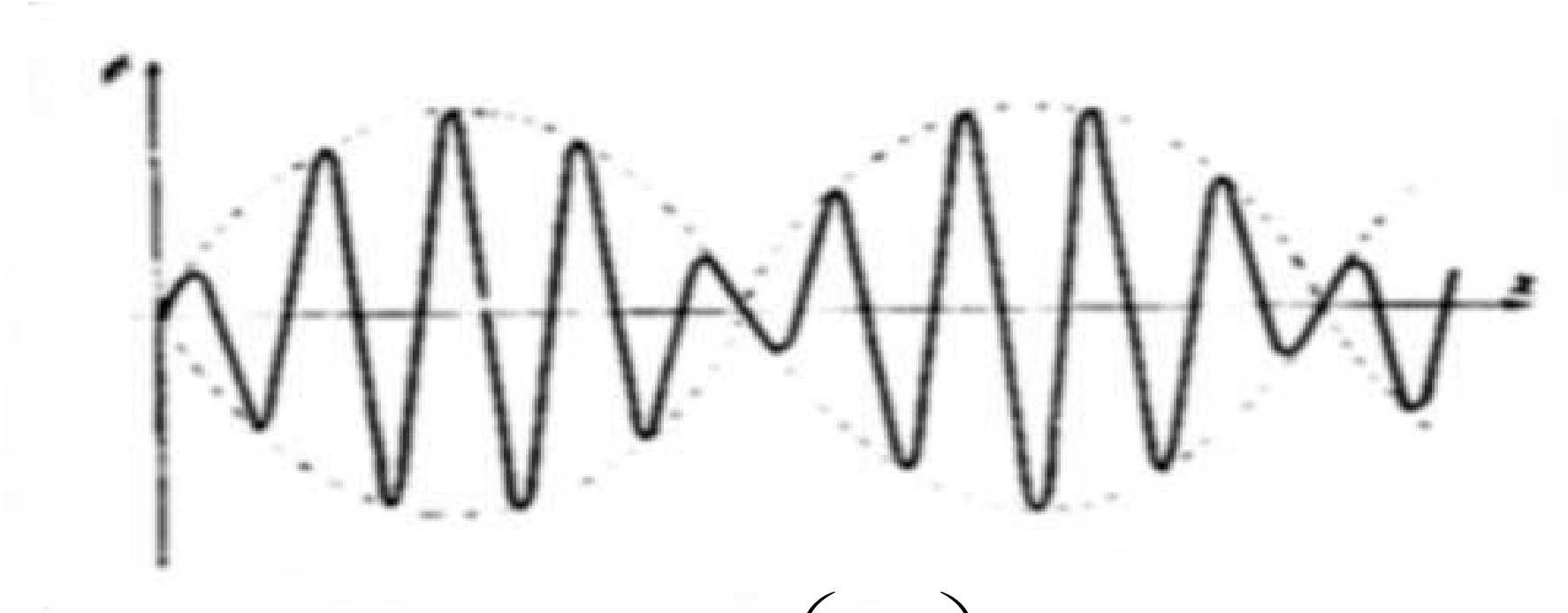

$$t\Delta\nu - x\Delta\left(\frac{\nu}{u}\right) = 0$$

$$\frac{1}{v_g} = \frac{t}{x} = \frac{\Delta\left(\frac{\nu}{u}\right)}{\Delta\nu} \xrightarrow{\Delta\nu \to 0} \frac{d}{d\nu}\left(\frac{\nu}{u}\right) = \frac{1}{2\pi}\frac{d\beta(\nu)}{d\nu}$$

DISPERSIA CROMATICA

$$v_g = \left(\frac{d\beta}{d\omega}\right)^{-1} \quad (75) \quad v_g = \frac{c}{n_g}, \beta = \bar{n}k_0 = \bar{n}\frac{\omega}{c} \quad (76)$$

$$n_g = \bar{n} + \omega\frac{d\bar{n}}{d\omega} \quad (77)$$

$$\Delta T = \frac{dT}{d\omega}\Delta\omega = \frac{d}{d\omega}\left(\frac{L}{v_g}\right)\Delta\omega = L\frac{d}{d\omega}\left(\frac{1}{v_g}\right)\Delta\omega = L\frac{d}{d\omega}\left(\frac{d\beta}{d\omega}\right)\Delta\omega = L\frac{d^2\beta}{d\omega^2}\Delta\omega = L\beta_2\Delta\omega \quad (78)$$

$$\beta_2 = \frac{d^2\beta}{d\omega^2}$$

$$\Delta T = \frac{dT}{d\lambda}\Delta\lambda = \frac{d}{d\lambda}\left(\frac{L}{v_g}\right)\Delta\lambda = LD\Delta\lambda$$

$$D = \frac{d}{d\lambda}\left(\frac{1}{v_g}\right) = -\frac{2\pi c}{\lambda^2}\beta_2 \quad (79)$$

DISPERSIA CROMATICA

$$BL|D|\Delta\lambda < 1 \quad (80)$$

$$\Delta T = \frac{dT}{d\lambda}\Delta\lambda = \frac{d}{d\lambda}\left(\frac{L}{v_g}\right)\Delta\lambda = LD\Delta\lambda$$

$$D = -\frac{2\pi c}{\lambda^2}\frac{d}{d\omega}\left(\frac{1}{v_g}\right) = -\frac{2\pi}{\lambda^2}\left(2\frac{d\bar{n}}{d\omega} + \omega\frac{d^2\bar{n}}{d\omega^2}\right) \quad (81)$$

$$D = D_M + D_W$$

$$D_M = -\frac{4\pi}{\lambda^2}\frac{d\bar{n}}{d\omega} = \text{dispersia de material}$$

$$D_W = -\frac{2\pi}{\lambda^2}\omega\frac{d^2\bar{n}}{d\omega^2} = \text{dispersia de ghid}$$

DISPERSIA DE MATERIAL

$$n^2(\omega) = 1 + \sum_{j=1}^{M} \frac{B_j \omega_j^2}{\omega_j^2 - \omega^2} \quad (82)$$

SILICA

B1 = 0.6961663, B2 = 0.4079426 , B3 = 0.8974794

Λ1 = 0.0684043 µm , λ2 = 0.1162414 µm , λ3 = 9.896161 µm

$$n_g = n + \omega \frac{dn}{d\omega} \quad (83) \qquad D_M = \frac{1}{c}\frac{dn_g}{d\lambda} \quad (84)$$

SILICA

$$D_M \approx 122\left(1 - \frac{\lambda_{ZD}}{\lambda}\right) \quad (85)$$

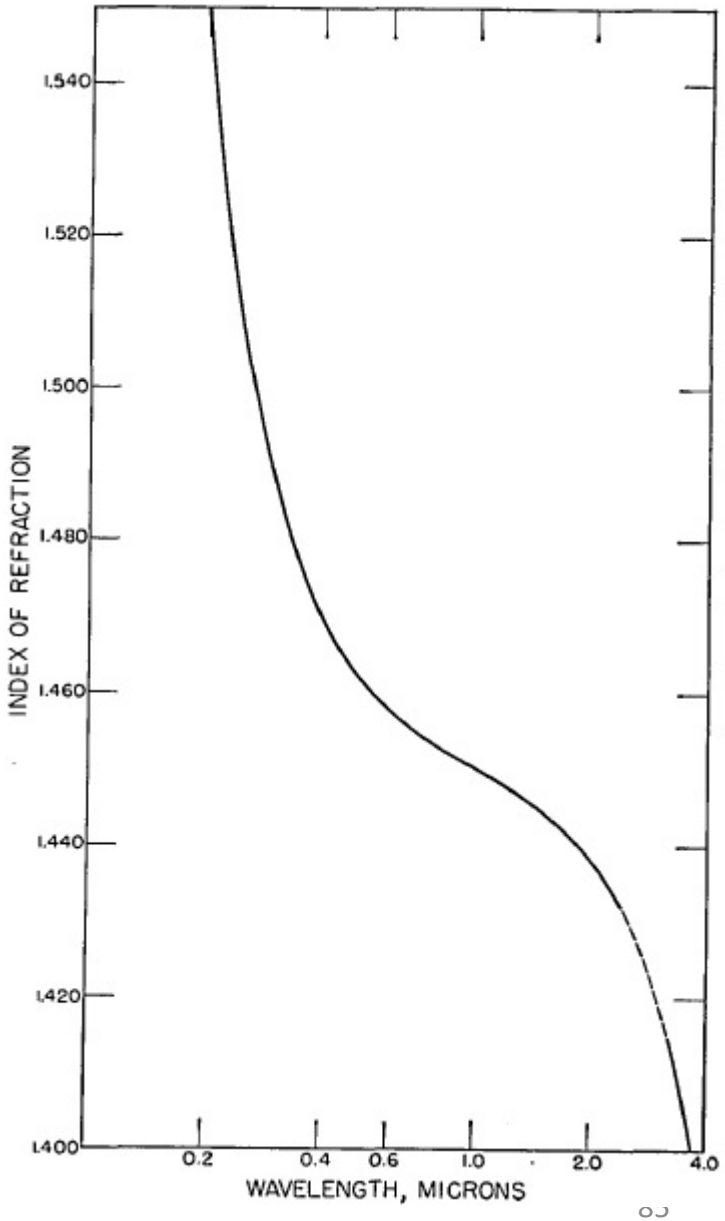

DISPERSIA DE GHID

$$D_W = -\frac{2\pi}{\lambda^2}\omega\frac{d^2\overline{n}}{d\omega^2} = -\frac{2\pi}{\lambda^2}\omega\frac{d^2}{d\omega^2}\left[n_2\left(1+b(V)\Delta\right)\right] \quad (86)$$

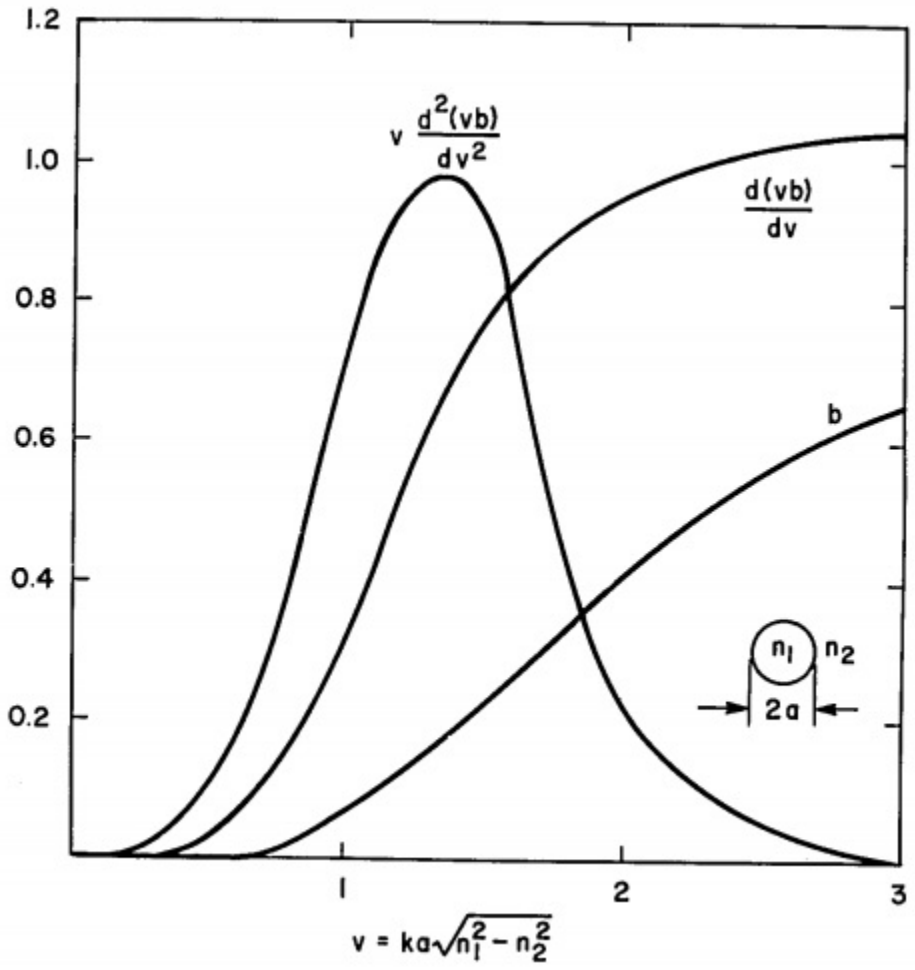

$$D_W = -\frac{2\pi\Delta}{\lambda^2}\left[\frac{n_{2g}^2}{n_2\omega}\frac{Vd^2(Vb)}{dV^2} + \frac{n_{2g}}{d\omega}\frac{d(Vb)}{dV}\right] \quad (87)$$

DISPERSIA DE GHID

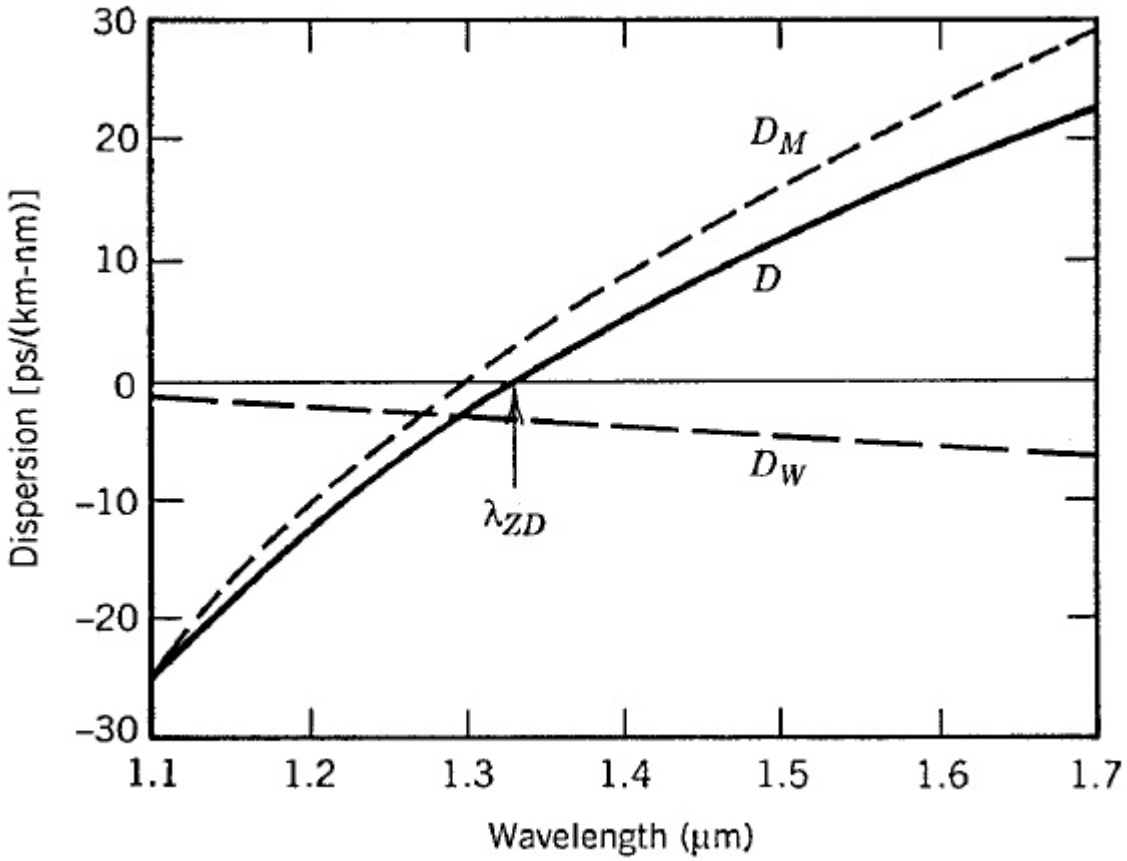

DISPERSIA DE POLARIZARE - PMD

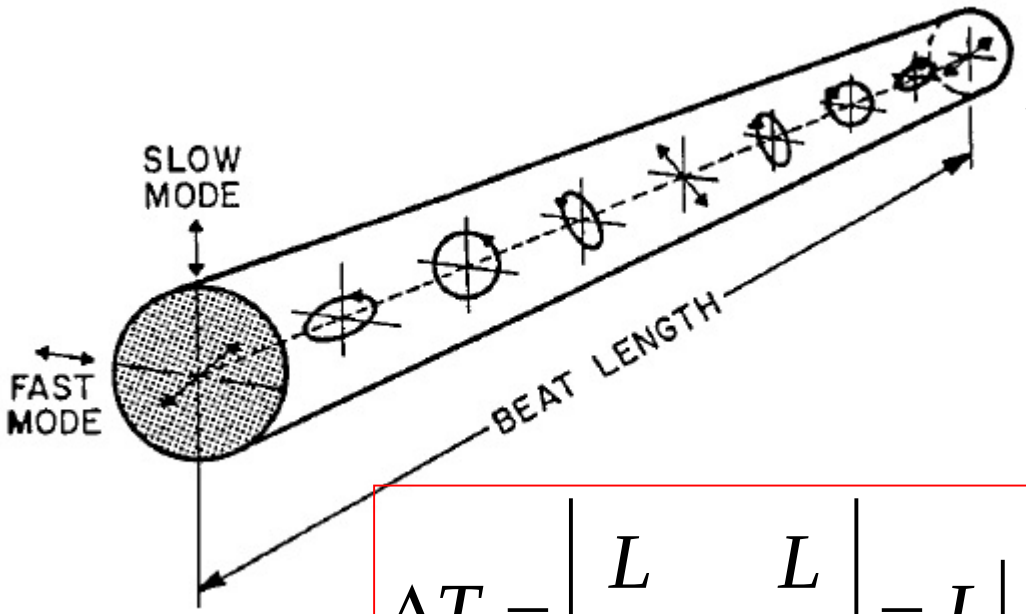

$$B_m = \left|\bar{n}_x - \bar{n}_y\right| \quad (88)$$

$$L_B = \lambda / B_m$$

$$\Delta T = \left|\frac{L}{v_{gx}} - \frac{L}{v_{gy}}\right| = L\left|\beta_{1x} - \beta_{1y}\right| = L\left(\Delta\beta_1\right) \quad (89)$$

$$\sigma_T^2 \equiv \left\langle \left(\Delta T\right)^2 \right\rangle$$

$$\sigma_T^2\left(z\right) = 2\left(\Delta\beta_1\right)^2 l_c^2 \left[\exp\left(-z/l_c\right) + z/l_c - 1\right]$$

DISPERSIA MODULUI DE POLARIZARE

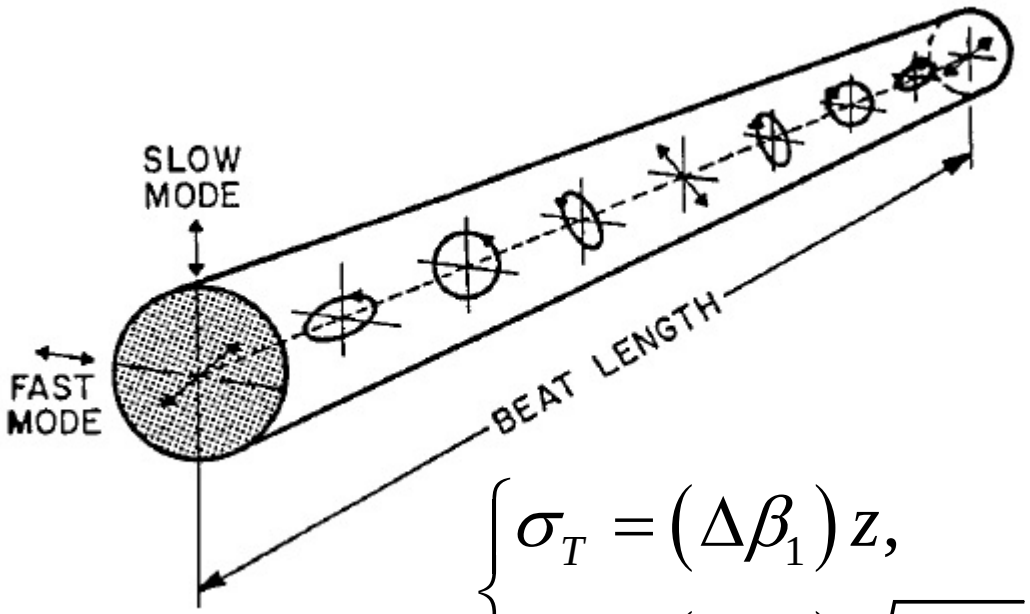

$$\begin{cases} \sigma_T = \left(\Delta\beta_1\right) z, & z \ll l_c \quad (90) \\ \sigma_T \approx \left(\Delta\beta_1\right)\sqrt{2 l_c L} = D_p \sqrt{L}, & z \gg l_c \quad (91) \end{cases}$$

PIERDERILE In FIBRA

$$\frac{dP}{dz} = -\alpha P \quad (92)$$

$$P_{ies} = P_{in} e^{-\alpha L} \quad (93)$$

$$\alpha\left[dB/km\right] = -\frac{10}{L}\log\left(\frac{P_{ies}}{P_{in}}\right) \quad (94)$$